MINNICH

A-5SCW WITH DUST COLLECTOR
OPERATOR/SERVICE MANUAL

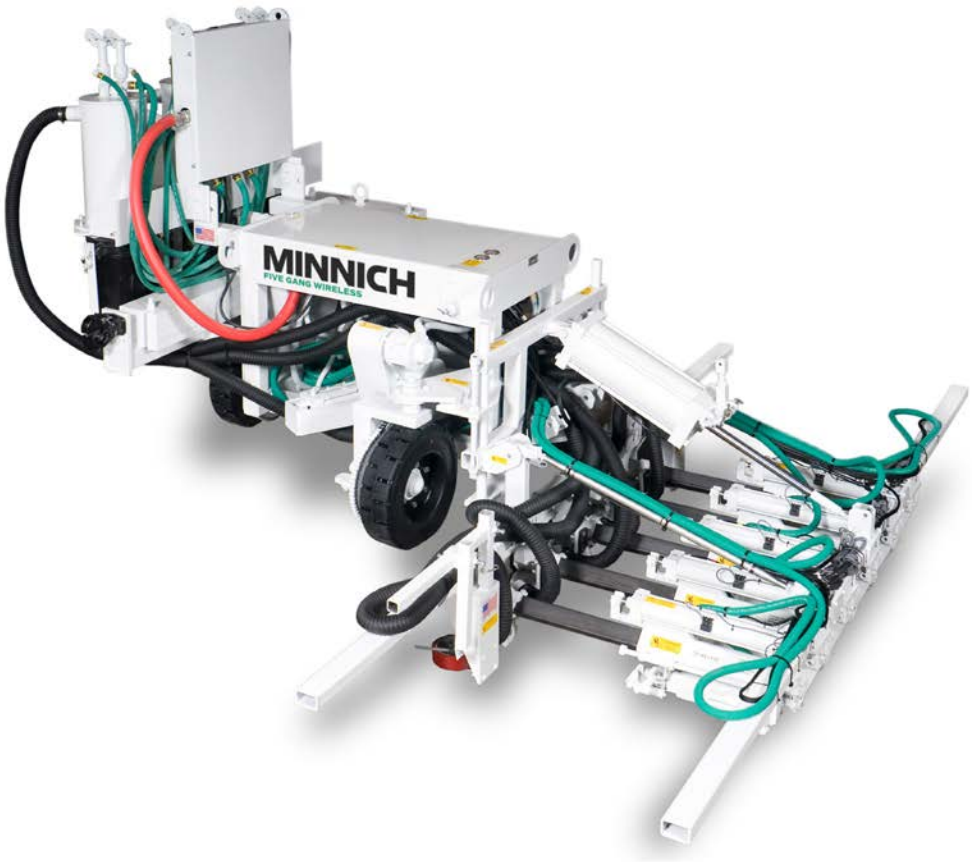

MINNICH MANUFACTURING

1444 ST RT 42
Mansfield,OH 44903

CONTACT

Phone: (419)-903-0010
Email: sales@minnich-mfg.com

REVISION DATE: 02/07/2025

TABLE OF CONTENTS

Chapter 1 - Introduction....1
- General Warnings....3
- General Safety....4
- Connect to Machine....10
- General Specifications....11
- Safety Decal Location....12

Chapter 2 - Manual....14
- Drill Steel & Bits....14
- A-5SCW Set Up Procedure....17
- A-5SCW Operation Procedure....18
- A-5SCW Operation Control....19
- Drill Remote Manual....20
- Problem With Drill....26
- Parts Manual....28
- Regulator Information....56
- Lubricator Information....58
- Dust Collection....60
- Notes....64
- Warranty....65
- Parts Ordering Online....66

NOTICE

It is Minnich's policy to constantly strive to improve our products. The information, specifications, and illustrations in this publication are based on the information in effect at the same time as approval for printing and publishing. Minnich therefore reserves the right to make changes in design and improvements whenever it is believed the efficiency of the machine which has been shipped or curring any obligation to incorporate such improvements in any machine which has been shipped or is in service. It is recommended that users contact Minnich or a Minnich Dealer for latest revisions.

NOTICE

See engine manual for information pertaining to the engine.

NOTICE

If there are any questions regarding the machine or its application which are not covered in this manual or in other literature accompanying this unit, please contact your Minnich Dealer or Minnich Manufacturing at 419-903-0010 or sales@minnich-mfg.com

⚠ WARNING

CALIFORNIA PROPOSITION 65

Engine exhaust and some of its constituents, and some dust created by power sanding, sawing, grinding, drilling and other construction activities contains chemicals known to the Sate of California to cause cancer, birth defects and other reproductive harm. Some examples of these chemicals are:

Lead from lead-based paints.
Crystalline silica from bricks.
Arsenic and chromium from chemically treated lumbar.

Your risk from these exposures caries, depending on how often you do this type of work. To reduce your exposure to these chemicals: ALWAYS work in a well ventilated area, and work with improved safety equipment, such as dust masks that are specifically designed to filter out microscopic particles.

⚠ WARNING

SILICOSIS WARNING

Grinding/cutting/drilling of masonry, concrete,-metal and other materials with silica in their composition may give off dust or mist containing crystalline silica.
Silica is a basic components of sand, quarts, brick clay, granite and numerous other minerals and rocks. Repeated and/or substantial inhalation of airborne crystalline silica can cause serious or fatal respirator disease, including silicosis. In addition, California and some authorities have listed repairable crystalline silica as a substance known to cause cancer. When cutting such materials, always follow the respiratory precautions mentioned above.

⚠ WARNING

RESPIRATORY HAZARDS

Grinding/cutting/drilling of masonry, concrete,metal and fumes containing chemicals known to cause serious or fatal injury or illness, such as respiratory disease, cancer, birth defects or other reproduction harm, if you are unfamiliar with th risks associated with the particular process and/or material being cut or the composition of the tool being used, review the material safety data sheet and/or consult your employer, the material manufacturer/supplier, governmental agencies such as OSHA and NIOSH and other sources on hazardous materials. California and some other authorities, for instance, have published lists of substances known to cause cancer, reproductive toxicity or other harmful effects.

Control dust, mist and fumes at the source where possible. In this regard use good work practices and follow the recommendations of the manufactures of suppliers, OSHA/NIOSH, and occupational and trade associations. Water should be used for dust suppression when wet cutting is feasible. When the hazards from inhalation of dust, mist and fumes cannot be eliminated, the operator and any bystanders should always wear a respirator approved by OSHA/NIOSH for the materials being used.

Do not operate or service the equipment before reading the entire manual. Safety precautions should be followed at all times when operating this equipment. Failure to read and understand the safety messages and operating instructions could result in injury to yourself and others.

This operation manual has been developed to provide complete instruction for the safe and efficient operation. Refer to the engine manufactures instructions for data relative to its safe operation. **Before using, ensure that the operating individual has read and understood all instructions in the manual.** The surrounding environment and you, could be damaged if you do not follow instructions.

SAFETY MESSAGES

The four safety messages shown below will inform you about potential hazards that could injure you or others. The safety messages specifically address the level of exposure to the operator and are preceded by one of four words: **DANGER, WARNING, CAUTION** or **NOTICE**.

⚠ DANGER

Indicates a hazardous situation which, if not avoided, **WILL** result in **DEATH** or **SERIOUS INJURY**

⚠ WARNING

Indicates a hazardous situation which, if not avoided, **COULD** result in **DEATH** or **SERIOUS INJURY**

⚠ CAUTION

Indicates a hazardous situation which, if not avoided, **COULD** result in **MINOR** or **MODERATE INJURY**

NOTICE

Addresses practices not related to personal injury

SAFETY SYMBOLS

Potential hazards associated with the operation of this equipment will be referenced with hazards symbols which may appear throughout this manual in conjunction with safety messages.

SYMBOL	SAFETY HAZARD
	Lethal exhaust gas hazards
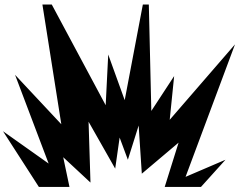	Explosive fuel hazards
	Burn hazard
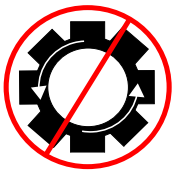	Factory Settings

⚠ WARNING

DO NOT USE TOOL IF IT IS IN NEED OF SERVICE!

⚠ CAUTION

- NEVER operate this equipment without proper protective clothing, shatter proof glasses, respirator protection, hearing protection, steel-toes boots and other protective devises required by the job or city and sate regulations.

- Never operate this equipment when not feeling well due to fatigue, illness or when under medication.

- NEVER operate this equipment under the influence of drugs or alcohol.

- ALWAYS check the equipment for loosened threads or bolts before starting.
- NEVER operate around corrosive chemicals or water containing toxic substances. These fluids could create serious health and environmental hazards. Contact local authorities for assistance.
- DO NOT use the equipment for any purpose other than its intended purpose or applications.

NOTICE

- This equipment should only be operated by trained and qualified personnel 18 years of age and older.
- This equipment is for industrial use only. Whenever necessary, replace nameplate, operation and safety decals when they become difficult to read.
- Manufacturer does not assume responsibility for any accident due to equipment modifications. Unauthorized equipment modifications will void all warranties. Any modification which it could lead to change in the original characteristics of the machine should be made only by the manufacturer who shall confirm that the machine is in comfortability with appropriate safety regulations.
- **Never** use accessories or attachments that are not recommended by Minnich for the equipment. Damage to the equipment and/or injury to user may result.
- **Always know the location of the** nearest fire extinguisher.

- ALWAYS know the location of the nearest first aid kit.

- ALWAYS know the location of the nearest phone or keep a phone on the job site. Also, know the phone numbers of the nearest ambulance, doctor and fire department. This information will be invaluable in the case of an emergency.

⚠ DANGER

- **NEVER operate the equipment in an explosive atmosphere, near combustible materials, or near flammable or low flash point fluids. An explosion or fire could result causing severe bodily harm or even death.**

⚠ WARNING

- NEVER disconnect any emergency or safety devices. These devises are intended for operator safety. Disconnection of these devices can cause severe injury, bodily harm or even death. Disconnection of any of these will void all warranties.
- NEVER operate equipment with the covers or guards removed. Keep fingers, hands, hair and clothing away from all moving parts to prevent injury. Wear clothing that will not likely become caught in the equipment or snag on any moving parts.

⚠ CAUTION

- ALWAYS be sure the operator is familiar with the proper safety precautions and operating techniques before using.
- NEVER leave the machine unattended. Turn off when unattended

- DO NOT expose vibrator to rain.
- DO NOT use vibrator motor in damp or wet locations without proper electrical circuits.
- DO NOT immerse the motor part in concrete.
- ALWAYS keep clear of rotating or moving parts while operating.
- NEVER leave the machine unattended while running
- ALWAYS disconnect the motor from the power source when not in use, before servicing, and when changing flexible shafting and vibrator heads.

- Allow the machine to cool before servicing. Contact with hot components can cause serious burns.

- Before Each use, ALWAYS check the motor to make certain that there are no damaged parts and that all parts function properly. If any damage or malfunctioning parts are found, have them repaired or replaced by an authorized service facility.

NOTICE

- ALWAYS secure forms. Make sure the form work is well made and braced to withstand the stresses made by vibration.
- ALWAYS keep vibrator motor clean for better and safer operation.
- ALWAYS store equipment properly when it is not being used. Equipment should be stored in a clean, dry location out of reach of children and unauthorized personnel.
- Use only factory authorized replacement parts.
- Store idle vibrator motor. When not in use, motor should be stored in a dry, safe storage area.

ENVIRONMENTAL SAFETY/DECOMMISSIONING

NOTICE

- DO NOT pour waste or oil directly into the ground, down a drain or into any water source.
- Contact you country department of Public Works or recycling agency in your area and arrange for proper disposal of any electrical components, waste or oil associated with this equipment.

- When the life cycle of this equipment is over, remove battery (if equip) and bring to appropriate facility for lead reclamation. Use safety precautions when handling batteries that contain sulfuric acid.
- When the life cycle of this equipment is over, it is recommended that the unit frame and all other metal parts be sent to a recycling center.

  Metal recycling involves the collection of metal from discarded products and its trans formation into raw materials to use in many Manufacturing a new product.

  Recyclers and manufactures alike promote the process of recycling center promotes energy cost savings.

NOTICE

Decommissioning is a controlled process used to safely retire a piece of equipment that is no longer serviceable. If the equipment poses an unacceptable and unrepairable safety risk due to wear or damage or is no longer cost effective to maintain (beyond life-cycle reliability) and is to be decommissioned (demolition and dismantlement), be sure to follow rules below.

- ALWAYS observe all applicable compulsory regulations relevant to environmental protection, especially fuel storage, the handling of hazardous substances, and the wearing of protective clothing and equipment. Instruct the user as a necessary, or, as the user, request this information and training.

- ALWAYS Dispose of hazardous waste properly. Examples of potentially hazardous waste include used motor oil, fuel, and fuel filters.
- DO NOT use food or plastic containers to dispose hazardous waste.
- DO NOT pour waste or oil directly onto the ground, down or drain or into any waste source.

NOTICE

- ALWAYS keep the machine in proper running condition.
- ALWAYS become familiar with the components of the machine before operation.
- Fix damage to machine and replace any broken parts immediately.
- ALWAYS store equipment properly when it is not being used. Equipment should be stored in a clean, dry location out of the reach of children and unauthorized personnel.
- NEVER lubricate components or attempt service on a running machine

CAUTION

- NEVER tamper with the factory settings of the engine or engine governor. Damage to the engine or equipment can result in operation in speed ranges above the maximum allowability.

BEFORE CONNECTING THE AIR COMPRESSOR:

CAUTION

- Install the drill steel and bits into the drill motors and close the latch retainers and rod guides.
- Make sure that the air compressor is set at an operating pressure of not more than 120 PSIG (8Bar)
- Make sure air line is cleaned out and is of the proper size and pressure rating for the drill unit.
- Make sure the lubricator is filled with proper lubricant. See Minnich recommended lubricant below.
- Make sure all controls are in the "off" position and the lift lever (if so equipped) is in the "up" position.
- Make sure all lock pins are in their locked position.

WARNING

- NEVER attempt to loosen any compressed air hose that is pressurized.
- KEEP AWAY from all hot or spark generating objects, do not smoke when handling fuel.
- So as to facilitate shipment, new or repaired units are not lubricated before delivery to customers.
- DO NOT use hydrocarbons and especially do not use fuel oil for lubricating purposes.
- DO NOT OPERATE MACHINE WITHOUT GUARDS AND COVERS IN PLACE
- ALWAYS disconnect the air supply before changing steel or dismantling the tool for service or repair. For maximum safety we advise the installation of a shut-off valve at the end of the air line.
- NEVER operate the engine with heat shields or guards removed.
- DO NOT remove the engine oil drain plug while the engine is hot. Hot oil will gush out of the engine crankcase and severely scald any persons in the general area of the machine.

NOTICE

- CLEAR AIR SUPPLY LINE: Before connecting vibrator, clear the compressed air supply line of possible impurities, contaminants and water.
- LUBRICATE: Every day or every four hours of continuous service, pour a ½ teaspoon of non-detergent oil into the quick release coupling. NOTE: An optional oiler/strainer is available.

CONNECT/START

NOTICE

If the vibration intensity drops, check that the filters are not clogged or that hoses are not kinked.

STORAGE

NOTICE

To properly store unit after use, hang the vibrator with the head up and set the handle (variable control assembly) in the open position to permit the discharge of possible impurities, contaminants and water.

PLACEMENT AND CONSOLIDATION

NOTICE

The force exerted by an internal concrete vibrator is controlled by the weight and the speed at which the eccentric rotates. The centrifugal force exerted can be arrived at by various combinations of weight (size of eccentric weight) and the speed at which the weight rotates. For years the most favorable working speed for a vibrator was considered to be around 10,200 RPM (VPM) and consequently this figure is used in many vibrator comparisons. More recently, the optimum speed for compaction has been accepted as being between 7500 and 9000 RPM.

PERSONAL SAFETY

- Stay alert, watch what you are doing, and use common sense when operating the machine.
- **DO NOT** use the tool while tired or under the influence of drugs, alcohol, or medication. A moment of inattention while operating power tools may result in serious personal injury or death.
- Dress properly. **DO NOT** wear loose clothing or jewelry. Tie up long hair. Keep your hair, clothing and gloves away from moving parts. Loose clothes, jewelery, or long hair can be caught in moving parts.
- **DO NOT** overreach. Keep proper footing and balance at all times. Proper footing and balance enables better control in unexpected situations.

SERVICE

- Tool service must be preformed only by qualified repair personnel. Service or maintained preformed by unqualified personnel could result in injury or death
- When servicing a tool, use only identical replacement parts. Use of unauthorized parts may create a risk of injury or death.

NOTICE

To find the latest revision of this publication, visit our website at: www.minnich-mfg.com

NOTICE

THIS MANUAL MUST ACCOMPANY THE EQUIPMENT AT ALL TIMES.

NOTICE

Specifications and part numbers are subject to change without notice.

CONNECT MACHINE TO INTERNET:

- Start the IQANgo app and Select “Connect machine to Internet”
- When the correct machine ID shows up, select it and tap “connect”
- The IQAN connect key is shown in the remote assistance view
- The IQAN connect key can be sent to another person by tapping this icon

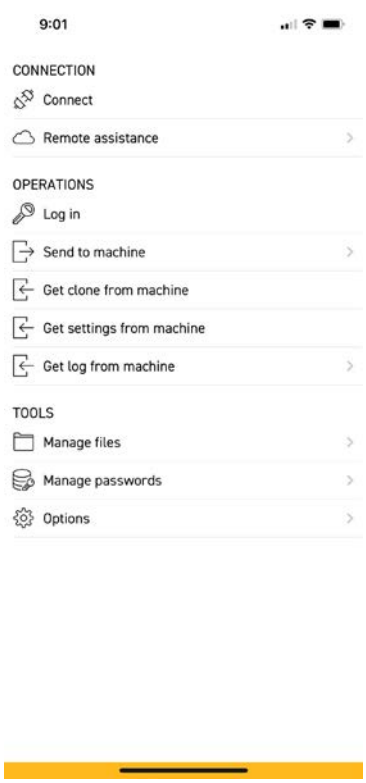

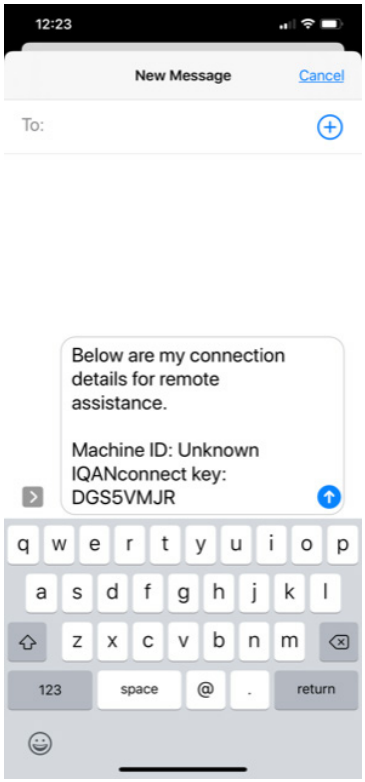

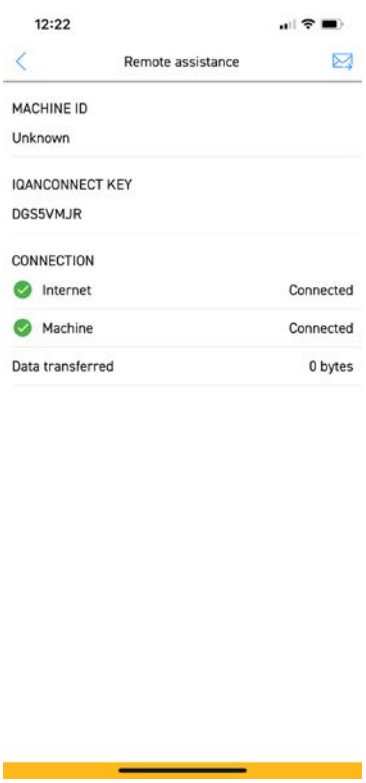

ELECTRICAL:

- Connect the system to a 24VDC, 20 Amp source.
- An approved and appropriately rated voltage and air disconnect is required to be installed in accordance to all Local and National Codes.
- Wiring hookup is to be performed by a licensed electrician.
- When power is disconnected from the machine, it should not be reapplied for a time period of no less than ten minutes.

ENVIRONMENTAL:

- +5°C to +40°C (+41°F to +104°F)
- 50% Rh at +40°C (+104°F), (90% Rh at +20°C (+68°F))
- Altitude – 1000m (3280ft) above mean sea level
- Unit is to be disposed according to all Local and National Regulations

CABLE:

TRANSPORTATION AND STORAGE:

- -25°C to +55°C for 24 hours (-13°F to +131°F)

INGRESS PROTECTION:

- Protection level IP2X is provided

SOUND:

- System operates at sound levels above 85dBA and 85dBC. Hearing protection is required.

TRANSMITTER:

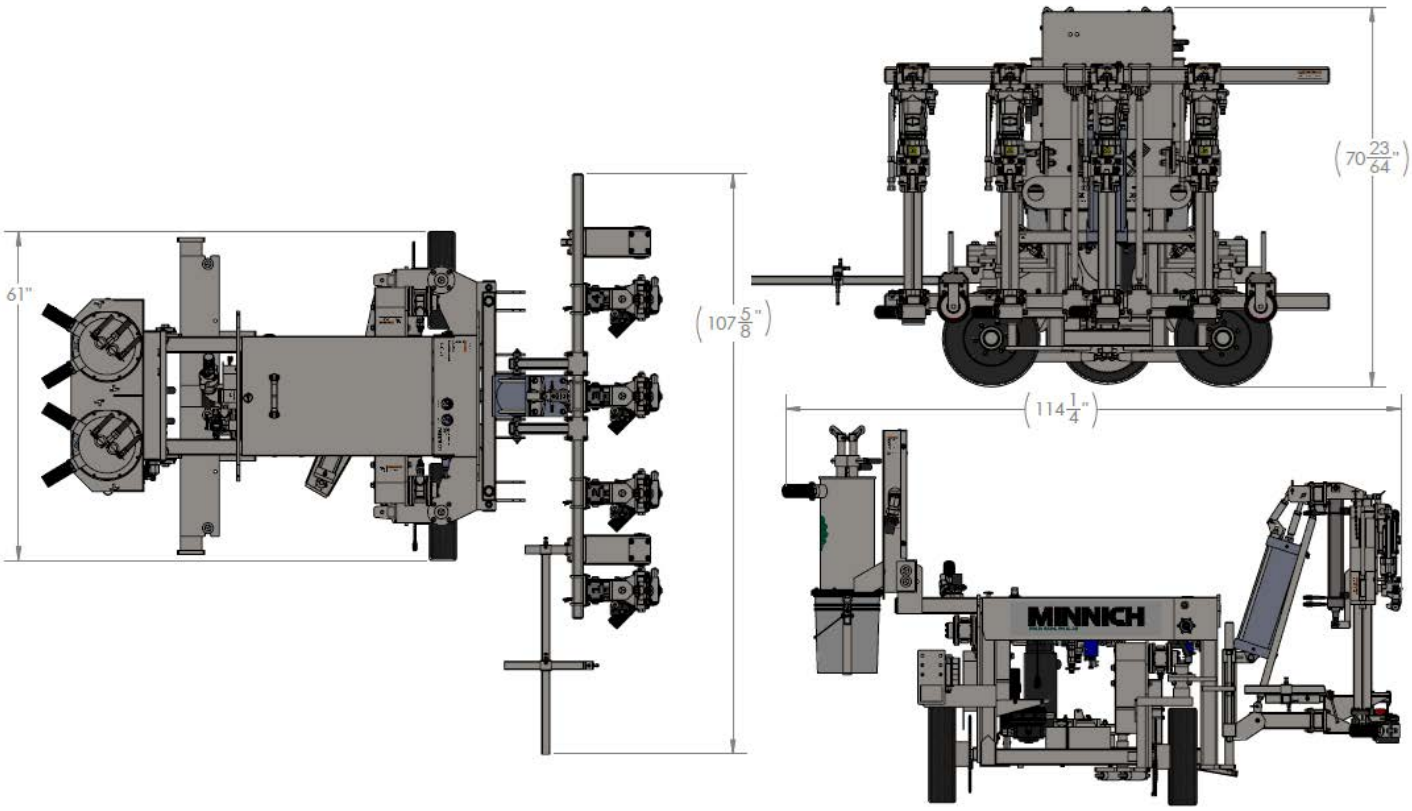

A-5SCW WITH DUST COLLECTOR

MODEL	A-5SCW
Drill Steel Shank	.875" x 4.25" (22.2mm x 107.9mm)
Drill Steel Length U.C.	24" (61.0cm)
Drill Bit Diameter	.625" – 2.50" (15.9mm to 63.5mm)
*Maximum Drill Depth	18" (45.7cm)
Drill Distance From Top of Slab	3.5" – 12" (8.9cm to 30.5cm)
Minimum Cutout Width	48" (121.9cm)
SCFM Required Per Drill	92.2 (43.5D m3/sec)
PSIG Required	110 (7.58 BAR)
Weight A-4SCW (basic)	3800lbs. (1723)kg)

Horizontal and Vertical drilling
Skew drill bed is available on the A-4SCW
On grade kit is available
Capable of towing air compressor
Power crab steering
Power steering
Power brakes
Hole Spacing Pointer
Solid rubber tires
Adjustable drill height, depth and centers
Auto control
Dust collection is available

SPECIFICATIONS SHOWN ARE STANDARD. VARIATIONS TO THE STANDARD ARE AVAILABLE.
***BASED ON 2 PIECE STEEL AND BITS. WHIRLYBITS SHOULD BE 1" (2.5CM) LONGER FOR MAXIMUM DRILLING DEPTH.**

NOTICE

All safety labels on Minnich Manufacturing units have been carefully placed so they can be easily seen at all times. There are several different types of labels on the units. Always keep these warnings free of dirt, concrete, or anything else that restricts visibility. Never remove the labels for any reason. If the label on your machine become worn or in any way difficult to read, call our parts department for replacements.

A

B

C

D

E

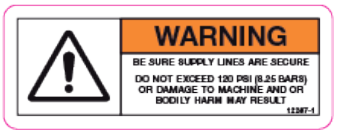

F

G

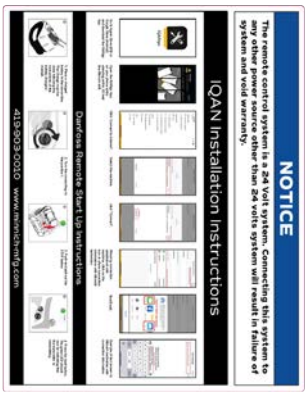

H

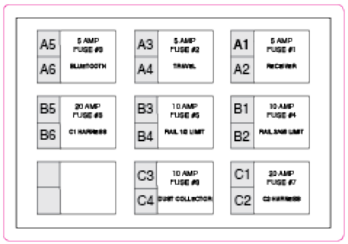

I

J

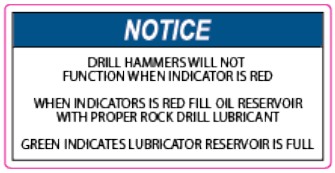

K

O

P

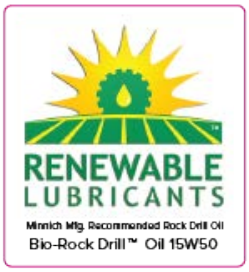

L

M

N

Q

R

S

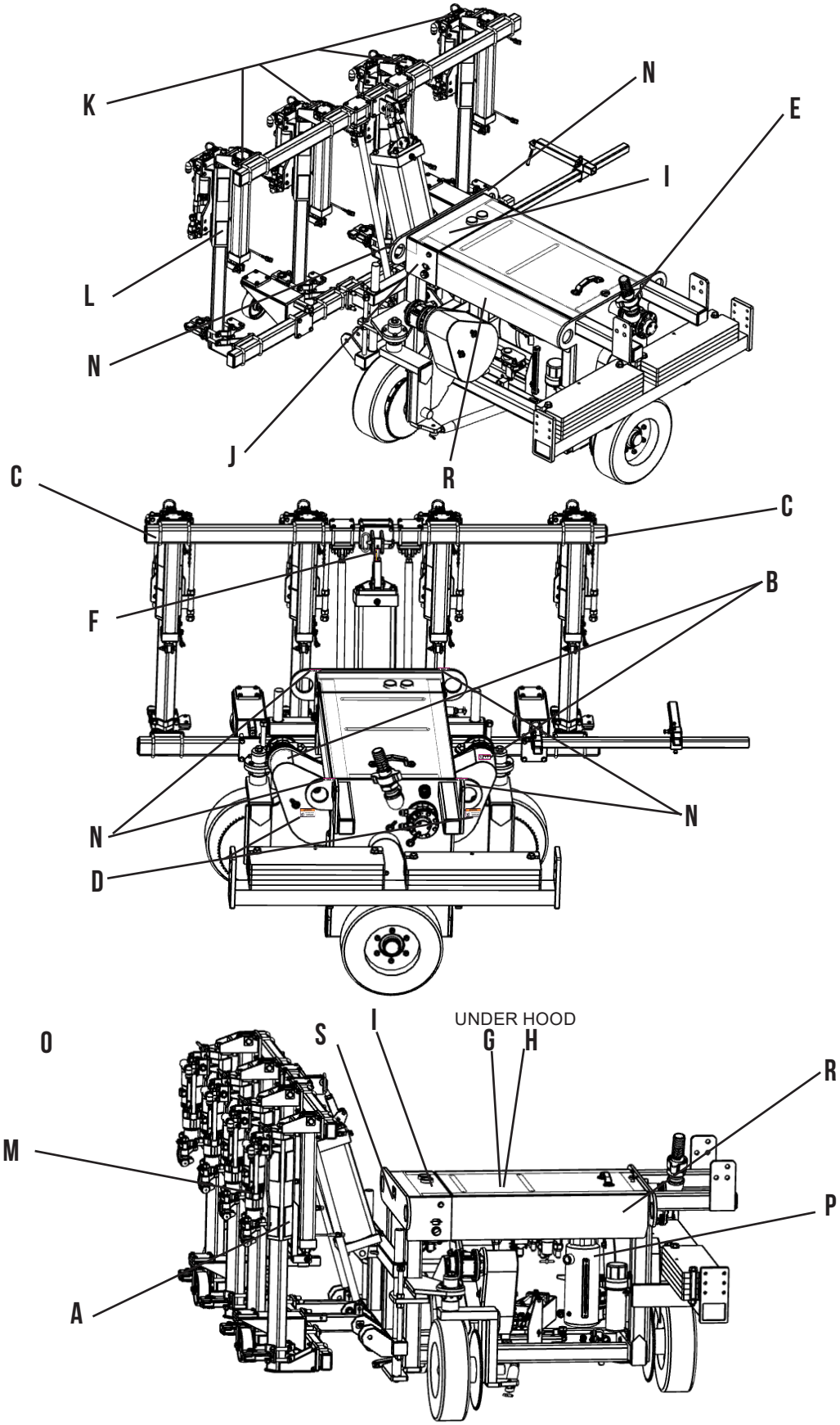
K
N
E
I
L
N
J
R
C
C
B
F
N
N
D
O
S
I
UNDER HOOD
G
H
R
M
P
A

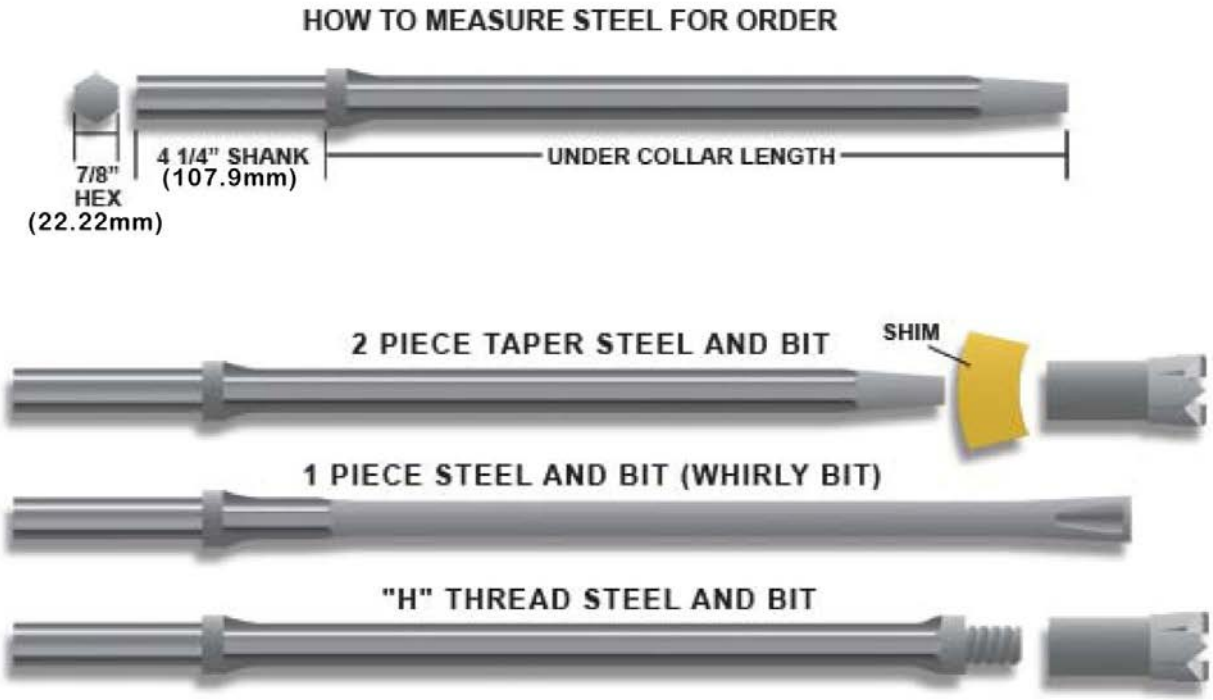

WARRANTY POLICY

All drill steel and bits sold to customer are intended for use in drilling concrete. It is not capable of drilling through steel mesh, rebar or dowel bars. Use in these applications will void all warranties and dramatically shorten bit life. Bit life is also affected by the sharpness of the bit, type of aggregate and condition of concrete. Minnich Manufacturing's drill steel and bit warranty is limited to the warranty provided by the supplier. All warranty claims must be submitted to Minnich for evaluation and sent to the supplier for authorization.

GENERAL NOTES

1. 2" (50.8mm) diameter maximum bit for hydraulic drills.
2. 2 1/2" (63.5mm) diameter maximum bit for pneumatic drills.
3. 5/8" (16mm) diameter is the smallest hole diameter.
4. Cutting speed varies from 15 to 30 seconds for a 6" (152.4mm) deep hole, depending on bit diameter and aggregate.
5. On average you can get 180 holes, 9" (228.6mm) deep per bit.
6. On average you can get 600 holes, 9" (228.6mm) deep per drill steel.
7. Removable bits are carbide and cannot be re-sharpened.
8. Whirly bit steel can be re-sharpened twice.

1 PIECE STEEL & BIT (WHIRLY BIT)

PART NUMBER	HOLE DIAMETER	SHANK SIZE	UC LENGTH
005367-12.00	5/8" (15.9mm)	7/8" x 4 1/4" (22.2mm x 107.9mm)	12" (30.5cm)
005367-24.00	5/8" (15.9mm)	7/8" x 4 1/4" (22.2mm x 107.9mm)	24" (61.0cm)
004209-12.00	3/4" (19.1mm)	7/8" x 4 1/4" (22.2mm x 107.9mm)	12" (30.5cm)
004209-24.00	3/4" (19.1mm)	7/8" x 4 1/4" (22.2mm x 107.9mm)	24" (61.0cm)
004541-12.00	7/8" (22.2mm)	7/8" x 4 1/4" (22.2mm x 107.9mm)	12" (30.5cm)
004541-24.00	7/8" (22.2mm)	7/8" x 4 1/4" (22.2mm x 107.9mm)	24" (61.0cm)
004745-12.00	1" (25.4mm)	7/8" x 4 1/4" (22.2mm x 107.9mm)	12" (30.5cm)
004745-24.00	1" (25.4mm)	7/8" x 4 1/4" (22.2mm x 107.9mm)	24" (61.0cm)

ALL 4 1/4" (107.9MM) SHANKS CAN BE CUT TO A 3 1/4" (82.55MM) SHANKS

TAPERED STEEL

PART NUMBER	SHANK SIZE	UC LENGTH	NOTES
003749-12.00	7/8" x 4 1/4" (22.2mm x 107.9mm)	12" (30.5cm)	For 1" (2.54cm) Bits ONLY 003747-1.000
003749 -24.00	7/8" x 4 1/4" (22.2mm x 107.9mm)	24" (61.0cm)	
004116-12.00	7/8" x 4 1/4" (22.2mm x 107.9mm)	12" (30.5cm)	For 1 1/8" (2.86cm) & Larger Bits ONLY
004116 -24.00	7/8" x 4 1/4" (22.2mm x 107.9mm)	24" (61.0cm)	

TAPERED BITS

PART NUMBER	SHANK SIZE	UC LENGTH	NOTES
003747-1.000	1" (2.54cm)	003839-00000	Use 003749-12.00 or 003749-24.00 Steel ONLY
003747-1.120	1 1/8" (2.86cm)	003901-00000	Use 004116-12.00 or 004116-24.00 Steel ONLY
003747-1.180	1 3/16" (3.01cm)	003901-00000	
003747-1.250	1 1/4" (3.18cm)	003901-00000	
003747-1.310	1 5/16" (3.34cm)	003901-00000	
003747-1.370	1 3/8" (3.49cm)	003901-00000	
003747-1.430	1 7/16" (3.65cm)	003901-00000	
003747-1.500	1 1/2" (3.81cm)	003901-00000	
003747-1.560	1 9/16" (3.97cm)	003901-00000	
003747-1.620	1 5/8" (4.13cm)	003901-00000	
003747-1.750	1 3/4" (4.45cm)	003901-00000	
003747-1.810	1 13/16" (4.60cm)	003901-00000	
003747-1.880	1 7/8" (4.76cm)	003901-00000	
003747-2.000	2" (5.08cm)	003901-00000	

ALL 4 1/4" (107.9MM) SHANKS CAN BE CUT TO A 3 1/4" (82.55MM) SHANKS

"H" THREAD STEEL

PART NUMBER	SHANK SIZE	UC LENGTH
005061-24.00	7/8" x 4 1/4" (22.2mm x 107.9mm)	24" (61.0cm)
05061B-24.00	1" x 4 1/4" (25.4mm x 107.9mm)	24" (61.0cm)

"H" THREAD BITS

PART NUMBER	HOLE DIAMETER	NOTES
005140-1.370	1 3/8" (3.49cm)	
005140-1.500	1 1/2" (3.81cm)	
005140-1.620	1 5/8" (4.13cm)	
005140-1.750	1 3/4" (4.45cm)	
005140-1.870	1 7/8" (4.76cm)	
005140-2.000	2" (5.08cm)	
005140-2.250	2 1/4" (5.72cm)	
005140-2.500	2 1/2" (6.35cm)	Multiple use bit

ALL 4 1/4" (107.9MM) SHANKS CAN BE CUT TO 3 1/4" (82.55MM) SHANKS

USAGE CALCULATION

The calculations below are nominal and could vary depending on the hardness of the concrete, aggregates used and the possibility of bits hitting steel reinforcement.

Whirly Bit, Taper Bit and "H" Thread Bit
(B)Bit=180 holes x 9" (22.86cm)
B=1620" (4114.8cm)
Number of bits needed = (number of holes x hole depth)/1620"

Taper Steel and "H" Thread Steel
(S)Steel=600 holes x 9" (22.86cm)
S=5400" (13716cm)
Number of steels needed = (number of holes x hole depth)/5400"

Example:
Need 50,000 Holes 12" (30.48cm) Deep for the job.

(50,000 x 12)/1620 = 371 Bits
(50,000 x 12)/5400 = 112 Steels

DRILL BIT INSTALLATION

1. Check to see that the hole through the center of the drill steel is not blocked, if so remove the object.
2. Clean the tapered end of the drill steel and the inside of the drill bit with a non-oily cleaner, making sure not to leave any oily residue.
3. Make sure a brass shim is in the drill bit. If not, carefully roll a new one and slide it into the bit making sure that the ends do not overlap.
4. Put the drill bit on the tapered end of the drill steel and tap it on a firm surface to seat the bit.

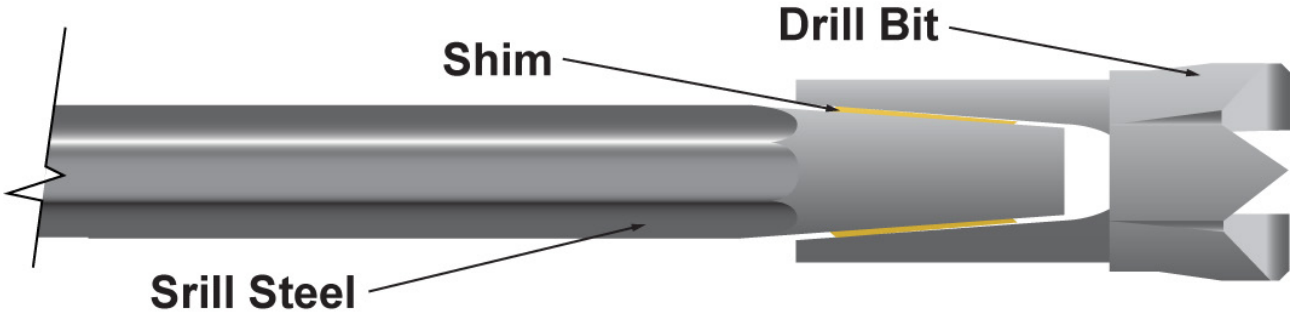

DRILL BIT REMOVAL

1. Swing latch so that drill steel can be removed from drill.
2. Pull drill steel out of drill.
3. Using two hammers, place one hammer on bottom side of bit. Using other hammer, strike the bit on the topside. Rotate drill steel 1/4 turn and strike top of bit again. Repeat procedure until bit comes off.

⚠ CAUTION

Bit may pop off of drill steel with some force.

A-5SCW SET-UP PROCEDURE

1. CAUTION Before connecting the air compressor:
    a. Make sure that all lock pins are in their locked position.
    b. Make sure all controls are in the "off" position and the lift lever (if so equipped) is in the "up" position.
    c. Make sure the lubricator is filled with proper lubricant. See recommended lubricants below.
    d. Make sure air line is cleaned out and is of the proper size and pressure rating for the drill unit.
    e. Make sure that the air compressor is set at an operating pressure of not more than 120 PSIG (8 Bar).
    f. Install the drill steel and bits into the drill motors and close the latch retainers and rod guides.
2. Connect the air line to the drill in accordance with hose connection instructions.
3. Start the compressor in accordance with manufacturer's instructions.
4. Position the drill unit where the first set of holes is to be drilled, keeping the drill unit back from the edge of the slab slightly. Set the brake if so equipped.
5. With the lift lock still engaged, charge the lift cylinder by toggling the lift lever up and down.
6. With the lift valve in the up position and after making sure that there are no obstructions in the path of the drill bed, remove the lift lock pin.
7. Using the lift lever, lower the drill bed into the drilling position.
8. Measure the drilling position from the top of the slab to the center of the drill steel. If necessary loosen the locknuts and, using the adjusting screws to raise or lower the drill bed to the proper drilling position. Tighten the locknuts.
9. Check to make sure the drill bed is parallel with the slab that is to be drilled into. If necessary, loosen the locknut on the lift cylinder and turn the adjusting screw in or out to align the drill bed with the slab to be drilled.
10. To set the drill depth, remove all the rail locking pins and feed the drill bit into the face of the slab without turning on the drills.
    a. On Standard Machines: Measure the distance between the drill stop rod and the drill stop pad. Adjust the stop bolt so that the distance between the stop pad and the stop bolt equals the drill depth.
    b. On Wireless Machines: Measure the distance that the feed cylinder rod extended. Add this distance to the required drill depth. Measure along the feed cylinder tube from the trunnion end to the posi tion sensor; adjust the sensor so that it is set at the distance determined above. Note: After drilling first hole with each drill, it is recommended to measure the actual drill depth and then readjust the position sensor accordingly.
11. Set the feed regulator to 20-24 PSIG (1.4-1.7 Bar).
12. See operating instructions to drill the first set of holes.

Minnich Mfg. Recommended Rock Drill Oil

RENEWABLE LUBRICANTS

Bio-Rock Drill™ Oil 15W50

USDA CERTIFIED BIOBASED PRODUCT

*****DO NOT USE ENGINE OIL, DIESEL OR HYDRAULIC FLUID*****

1. Operator should stand in a safe location with good visibility, not less than 10 feet (3 meters) from the closest point on the machine.
2. Place feed lever(s) in the "in" position to move the bits against the face of the slab.
3. Place the drill lever(s) in the "on" position to turn on the drill motors. Press the initiate lever is so equipped.
4. When drill motors reach the required depth, place the feed lever in the "out" position.
5. When the drill steel is clear of the hole, place the drill lever in the "off" position.
6. On units with the wireless control, the drills will automatically retract and shut off when the hole depth has been reached.
7. Release the brake if so equipped. Position the drill for the next set of holes to be drilled. Reset the brake is so equipped.
8. On units equipped with steering, turn the wheel or press the joy stick right or left to steer the unit right or left.
9. On units with the "crab" feature, it is helpful to turn the crab "on" and then steer right or left to keep the machine tight against the face of the slab while repositioning the unit.
10. There is a low-level oil indicator, this must be "green" in order for the hammers to operate. If the indicator is "red", please fill oil reservoir with proper rock drill oil.

⚠ WARNING

Flying Debris: During drilling, chips may be ejected.

⚠ WARNING

Dust: Concrete dust will be ejected from the hole.

⚠ WARNING

Loud Noise: Air compressor and drill unit will create loud noise levels

⚠ WARNING

Pinch Points: Keep clear of all moving parts.

1. Travel Forward/Reverse: Pressing joystick forward/reverse will cause the brake to release and the machine to move forward/reverse. The farther the joystick is pressed, the faster the machine will move. When the joystick is centered, the machine stops, and the brake will automatically engage. When the e-stop is engaged, the machine is stopped, and the brake is engaged.
2. Lift Up/Down: Holding the switch in the up position raises the drill bed; holding the switch in the down position lowers the drill bed. When the e-stop is pressed, the drill bed stops.
3. Pulse: (If equipped with a dust collector) Holding the switch in the on-position supplies air to the inside of the dust collection filters. When the e-stop is pressed, the pulse air is stopped.
4. Crab: When the switch is placed in the on position, the steering stop is engaged and the crab stop is disengaged. When the switch is in the off position, the crab stop is engaged and the steering stop is disengaged. When the estop is pressed, the stop remains in its current position.
5. Steer: When the switch is pressed right, the front wheels turn right; when the switch is pressed left, the wheels turn left. When the switch is release, the wheels remain in their current position. When the e-stop is pressed, the steering stops moving.
6. Drill 1 thru 5: When the switch is placed in the on position, drill one, dust collector one (if so equipped) and pulse one/two (if so equipped) turn on when initiate is pressed. Unless fixed limit one is on, then it waits for the fixed limit to go off. When fixed limit one is back on, all above functions are turned off. When the switch is placed in the off position, all above functions are turned off. All functions are stopped when e-stop is pressed. Initiate must be pressed to restart after e-stop is cleared.
7. Feed 1 thru 5: When the switch is placed in the on position, drill feed one moves drill in when initiate is pressed. Drill feed is automatically moved out when adjustable limit one is momentarily on. When the switch is in the off position, the drill feed is moved out. When e-stop is pressed, the state of the feed is not changed and cannot be changed until e-stop is cleared.
8. Initiate: Pressing these switch momentarily causes any feed and drill functions that are in the on position on the transmitter to start. When the e-stop is pressed, the output of this switch is disabled.
9. Power: See page 22
10. E-Stop: Pressing the e-stop engages the stop. (See above listed actions)

⚠ WARNING

The e-stop is not to be used as a lockout for performing maintenance functions, making adjustments, or clearing jams.

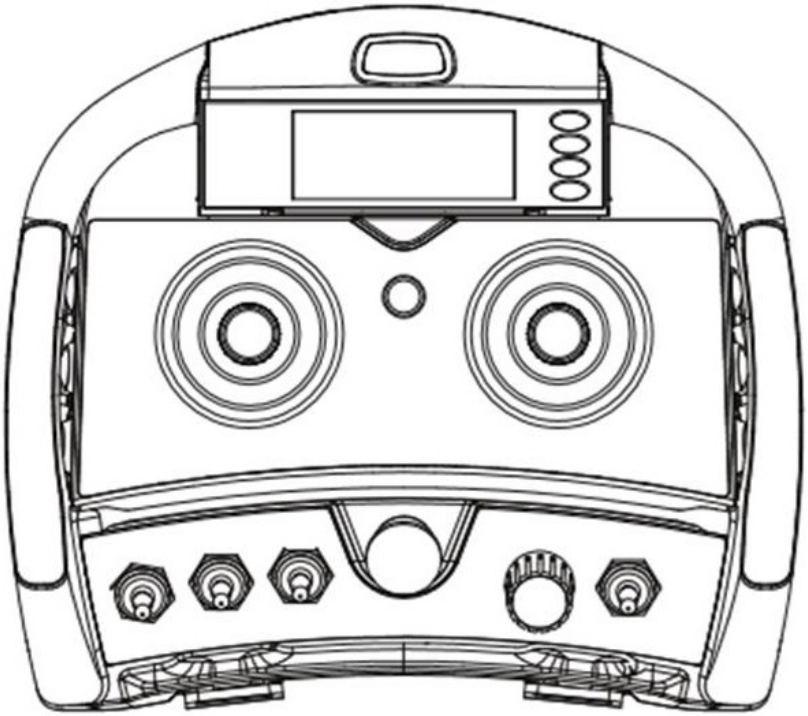

IK 3

USER'S MANUAL

⚠ WARNING

These instructions must be read carefully in order to install and use the set properly and to keep it in perfect working condition and to reduce the risk of misuse.

⚠ WARNING

DO NOT use this set on machines potentially explosive atmospheres, except the models certified ATEX/RATEX to work in that conditions.

⚠ WARNING

- The device must be used with the manufacturers' battery and battery charger.
- The equipment must be operated by qualified by personnel.
- After use, never leave the equipment **ON** (one or several transmitters). Always set the contact key and the **STOP** button to switch **OFF** position of the equipment to avoid accidentally to activate maneuverer specially in crane maintenance purposes
- **DO NOT** use the set when visibility is limited.
- Avoid knocking or dropping the set.
- **DO NOT** use the set if failure is detected.

1. Strictly adhere to the instructions for installation contained in this manual.
2. Make sure that professional and competent personnel carry out the installation.
3. Ensure that all site and prevailing safety regulations are fully respected.
4. Make sure that this manual is permanently available to the operator and maintenance personnel.
5. Remove the transmitter out of reach of unauthorized personnel.
6. Remove the transmission key when the set is not in use.
7. On starting each working day, check to make sure that the **STOP** button and other safety measures are working.
8. When in doubt, Press the **STOP** button.
9. Whenever several sets have been installed, make sure the transmitter you are going to use is the right one. Identify the machine controlled on the label for this purpose on the transmitter or by using the display (in case it has one)
10. Service the equipment periodically.
11. When carrying out repairs, only use spare parts supplied by IKUSI dealers.

Remove the transmission key only when the set is not in use or to deny the access

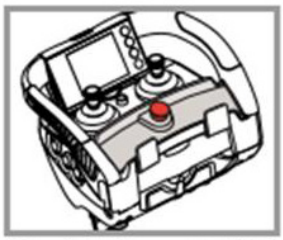
When in doubt, press the STOP button

Make sure the transmitter works with the machine to be handled

After use set the contact key and the STOP button

Do not use the set when visibility is limited

Avoid knocking or dropping the set

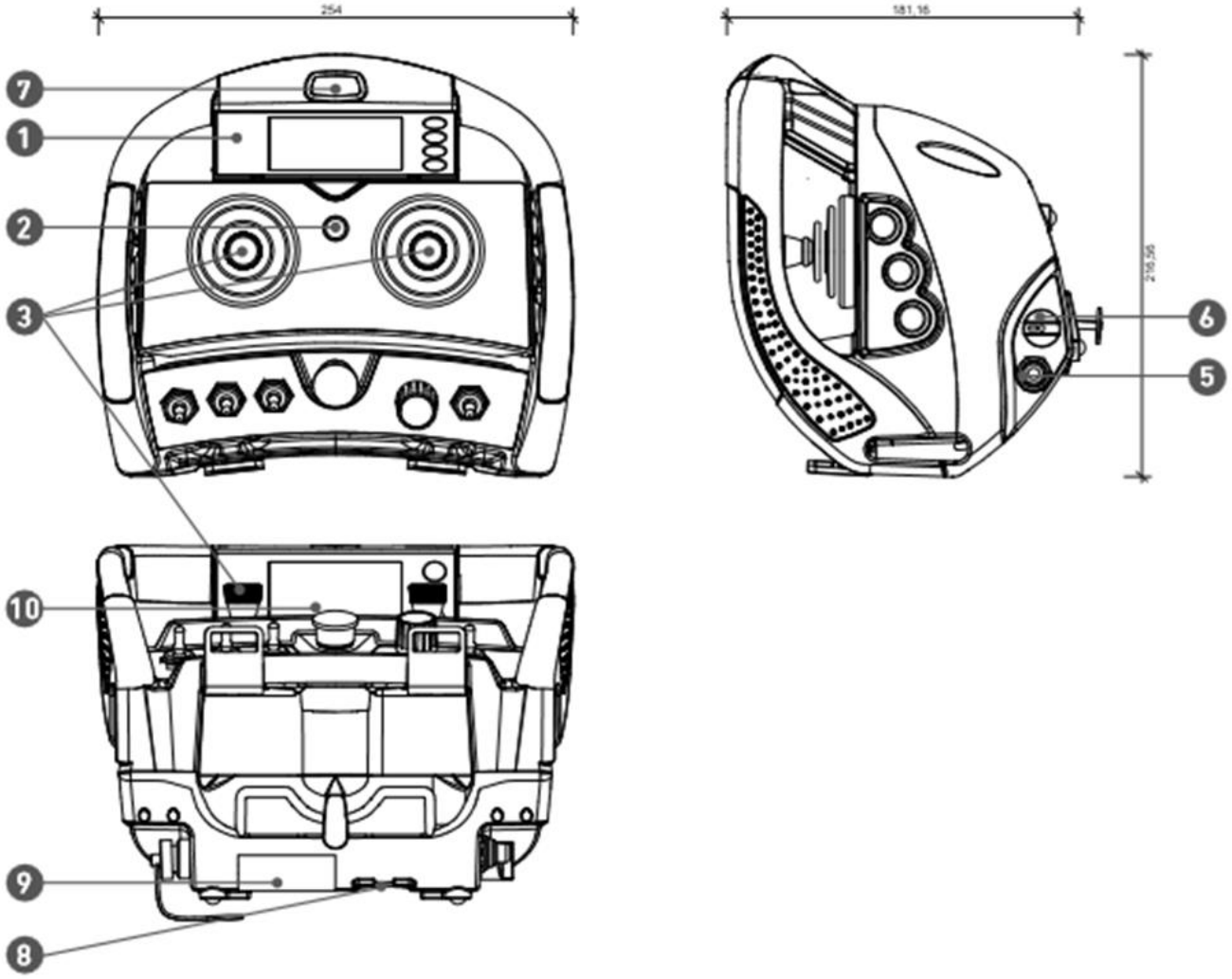

1. Label For Crane Identification
2. LED
3. Maneuverer elements
4. Contact key
5. Start Pushbutton
6. STOP button
7. Option: Range Limiter
8. External and extractable EP70 EEPROM module
9. Battery
10. 3,5" TFT Display
11. Lateral pushbuttons

IN ORDER TO TURN THE TRANSMITTER ON (OPERATION MODE), PLEASE FOLLOW THE NEXT STEPS

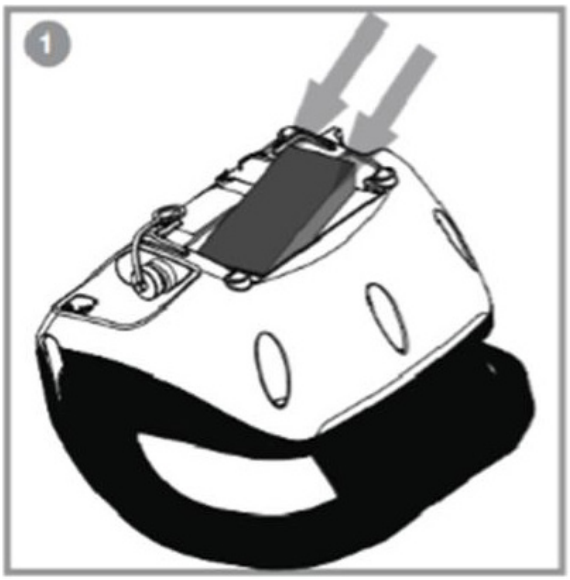

1. Place a charged battery in the transmitter. The charge must be done following the instructions of the battery chargers' Manual in the following section.
*Minnich - add this along with batter charge instructions to manual.

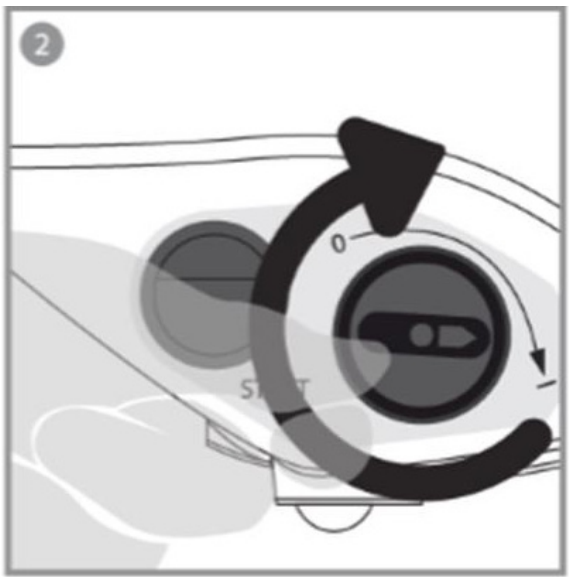

2. Turn the contact key to the position I.
*Minnich - Arrow is counterclockwise, should be CLOCKWISE turn to "I"

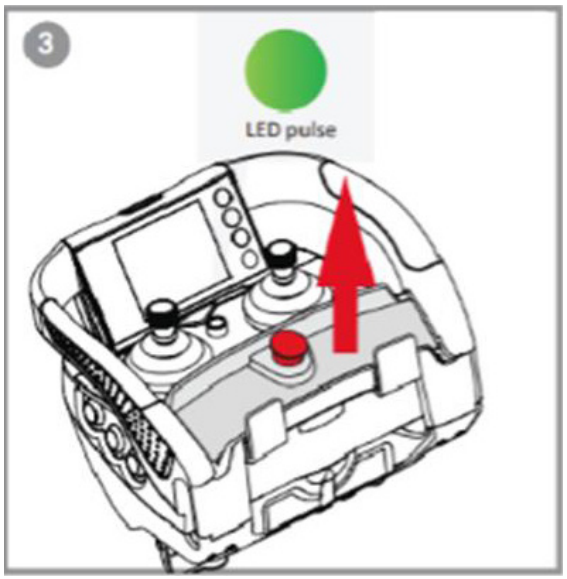

3. Push and pull out the STOP button

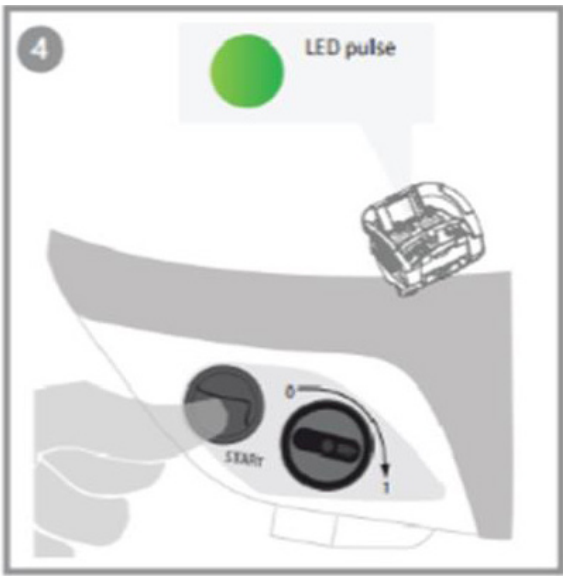

4. Press the start button. The green LED should now light indicating that the transmitter is transmitting

RECOMMENDATIONS

The transmitter has status monitoring LED's which help to identify irregularities. The most common signal are contained in the tables below.

- Δ Use the belt provided with the transmitter to prevent the transmitter from falling
- Δ **Do-Not** clean the transmitter with solvents or pressurized water. Use damp cloth or soft brush.
- Δ Use and recharge the battery regularly.
- Δ Check the pushbuttons. In case they show signs of deterioration, please contact the Authorized Technical Service.
- Δ Check if the battery contacts are correct. Otherwise, replace them.

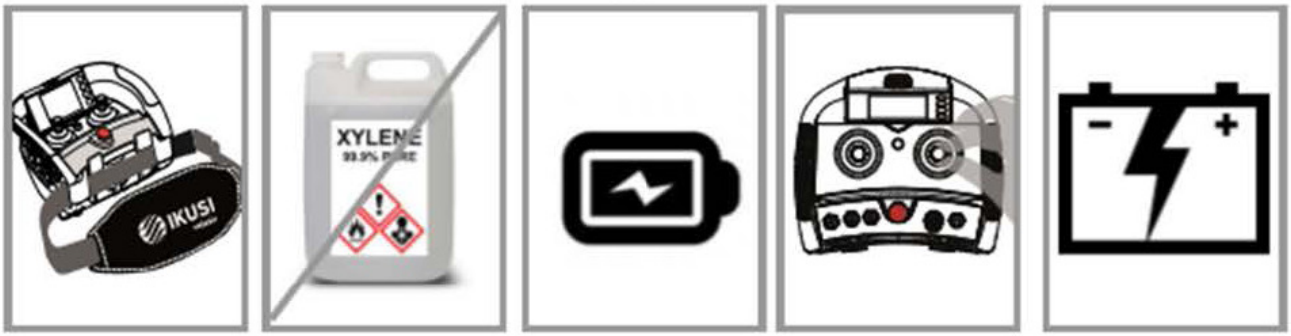

05- TROUBLESHOOTING

The transmitter has status monitoring LED's which help to identify irregularities. The most common signal are contained in the tables below.

LED COLOR/ FREQUENCY (SOUND)	PULSE FREQUENCY	MEANING	ACTION
Green/ Continuous (No Sound)		The transmitter works properly. OPERATION mode OK	OK
Green/ Pulses (No Sound)		STANDBY mode. If transmitter is 4 minutes ON and no action has been taken.	Push START to return to the OPERATION mode.
Red/ Slow Pulses (Beep)		Battery low signal. In 5 minutes you need to change bat.	Replace Battery with a full charged one.
Red/ Fast Pulses (Beep)		EEPROM module missing or corrupt.	Check EEPROM module or reprogram if necessary.
Red/ Double Pulses (Beep)		A maneuverer activated at transmitter started process. HW damage if no order is active.	Release replace transmitter if necessary.
Red/ Continuous (Beep)		Transmitter's general failure. HW damage.	Replace Transmitter.

NOTICE

Changes or modifications not expressly approved by Danfoss could void the user;s authority to operate this equipment.

TECHNICAL SPECS

CB70

AC Power Supply	230 Vca +/- 10%, 50
Optional	115 Vca, 60 Hz
DC Power Supply	From 10, 5 V to 35 V

BT24IK

Voltage	4,8 V
Capacity	2400 mAh NiMH
Charging temperatures	From 0 ° to 45 ° C
Discharge temperature	From -20 ° to 50 °C
Autonomy	From 12 to 18 h (use at 50%)
Charging mode	Fast (<2h) and intelligent
Weight	156,3g

SETTING UP

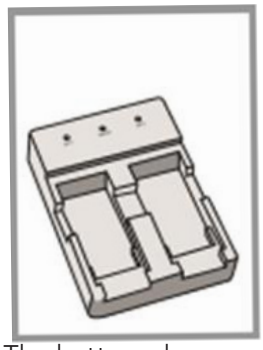

The battery charger has two charging compartments that can simultaneously charge two batteries

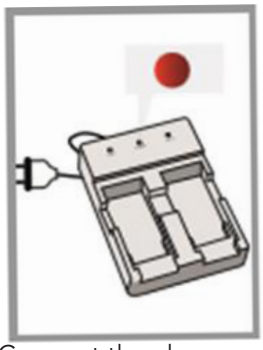

Connect the charger to the main using the power source and cable supplied: The red LED will switch.

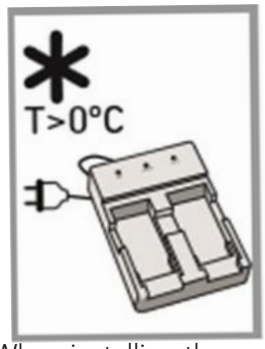

When installing the battery charger, bear in mind batteries must be charged at temperatures over 0 °C

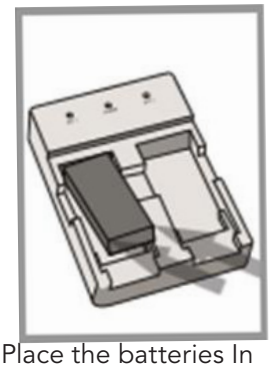

Place the batteries In the charger.

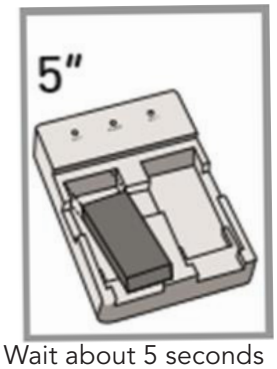

Wait about 5 seconds between the consecutive insertions of batteries in their locations.

STATUS LEDS

EACH BATTERY LOCATION HAS A GREEN INDICATOR ASSOCIATED

-Green LED blinking:
Battery excessively unloaded.
-Green LED permanently lighting:
normal charging operation mode.
-Green LED switched OFF:
Battery charging process has finished.

RECOMMENDATIONS

THE BATTERY CHARGER HAS TWO CHARGING COMPARTMENTS THAT CAN SIMULTANEOUSLY CHARGE TWO BATTERIES.
CONNECT THE CHARGER TO THE MAINS USING THE POWER SOURCE AND CABLE SUPPLIED; THE RED LED WILL SWITCH.

- Δ **Do not** Recharge the battery until it is completely flat. The transmitter indicated this moment.
- Δ **Always** charge the batteries at temperatures between 0 ° and 45 ° C (the batteries will not become fully charged at temperatures exceeding 45 ° C). Remove that the charger must not be left in direct sunlight.
- Δ Charge the batteries at least once every six months
- Δ Avoid short-circuits between the battery contacts. Do not carry charged batteries in tool boxes or next to other metal objects (keys, coins, etc.)
- Δ **Always** keep contacts clean.
- Δ **Never** leave batteries in direct sunlight.

PROBLEM: DRILL DOES NOT RUN

CAUSE	REMEDY
DRILL NOT GETTING AIR	1. On Multi Drill units, switch airline with drill that is working properly. If drill now runs check the air control valve. If the valve works, check the drill. 2. Check clave on air compressor and drill unit to be certain they are completely open 3. Check compressor. It should have 100SCFM (47.20m^3/sec.) per drill and 110PSI (7.6 BAR) at drill manifold when drilling with large drills. 4. Make certain all fittings are connected properly and not leaking.
COUPLING OR HOSE OBSTRUCTION	Remove Obstruction
FAILURE IN THE ELECTRICAL CIRCUIT	Check switches, connections, coilds, ground & voltage. If the power unit (backhoes, grader, ETC.) is being jump started, check the AMPS & voltage being jump supplied to coils from the battery, it may be too low.
FAILURE OF DRILL SOLENOID VALUE (MULTI DRILL UNITS WITH REMOTE ELECTRICAL CONTROLS)	Check valve - you should be able to feel the solenoid move when it is actuated. Make sure you have current to the solenoid coil. Replace the dolenoid if there is no movement.
MECHANICAL FAILURE OF DRILL	Disassemble the drill & inspect for damaged parts.

PROBLEM: DRILL RUNS SLOW OR DOES NOT DRILL EFFECTIVELY

CAUSE	REMEDY
NOT ENOUGH AIR REACHING DRILL. IT SHOULD HAVE 100SCFM (47.2DM^3/SEC.) PER DRILL AND 110 PSI (7.6 BAR)	On Multi Drill units. Turn off one or two drills. If the remaining drills pick up speed, check the air compressor.
RESTRICTION IN AIR LINE	A foreign object in the air line or possibly a reduction in the air line caused by a reducer fitting.
TOO SMALL AIR LINE	Following are supply line sizes for drilling: A-1 Single Drill 3/4" (19mm) A-2 Two Drills 1-1/4" (38.75mm) A-3& A-4 Three & four drills 1-1/2" (38.1mm) A-5 Five Drills 2" (50.8mm)
AIR PRESSURE TO CYLINDER "FEEDING" DRILL INTO CONCRETE NOT ADJUSTED PROPERLY	Excessive pressure can cause drill to "bind up" in the hole. Pressure that is too low will not "feed" the drill into the concrete. The air pressure required varies with the drill model. Horizontal- all units with large drills use 22-26 PSI (1.5-1.8 bar). Drill units using the 15LB (6.8kg) class drill will use 16-20 PSI (1.1-1.4 Bar). Vertical - all drill units use 5-6 PSI (0.34-0.41 Bar). With the correct air pressure, the drill steel should have a slight rattle.
INSUFFICIENT AIR FLOW TO KEEP HOLE BLOWN CLEAN	Check for obstruction in the blow tube in the drill.
LUBRICATOR PUTTING OUT TOO MUCH OIL TO DRILL	If you notice more than a light film of oil on the air deflector on the bottom of the drill adjust the lubricator, make certain you are using the type of oil called for in the operation and maintenance manual.
MECHANICAL BLINDING OF DRILL CARRIER	Make sure the eight bearing pads are adjusted correctly. The square tube that the drill carrier slides on must be free of rust so that the carrier slides freely, drill steel must not be binding in the guide bearing.
BENT DRILL STEEL, WORN DRILL BIT OR DRILLING INTO REBAR	Replace the drill steel or bit. If drilling into rebar, move the drill.
USING 3 1/4" (8.25CM) SHANK DRILL STEEL IN 4 1/4" (10.8CM) SHANK CHUCK DRILL	The drill steel will rotate but it will not allow the drill piston to hammer properly, replace it with the correct 4 1/4" (10.8cm) drill steel.

ITEM NO.	PART NUMBER	DESCRIPTION	QTY.
1	000708-00004	MODEL & SERIAL # NAME PLATE	1
2	006037-1.500	5/16"-18 X 1-1/2" GRADE 5 H.H.C.S.	2
3	006038-1.250	3/8"-16 X 1-1/4" GRADE 5 H.H.C.S.	2
4	006040-4.500	1/2"-13 X 4-1/2" GRADE 5 H.H.C.S.	2
5	006043-5.500	3/4"-10 X 5-1/2" GRADE 5 H.H.C.S.	2
6	006043-6.500	3/4"-10 X 6-1/2" GRADE 5 H.H.C.S.	2
7	006072-00000	3/8"-16 HEX NUT	2
8	006104-00000	FLAT WASHER, 1/4 USS	4
9	006106-00000	FLAT WASHER, 5/16 USS	2
10	006112-00000	FLAT WASHER, 1/2 USS	4
11	006118-00000	FLAT WASHER, 3/4 USS	8
12	006144-00000	LOCKWASHER, #8	3
13	006145-00000	LOCKWASHER, #10	8
14	006148-00000	LOCKWASHER, 5/16	2
15	006149-00000	LOCKWASHER, 3/8	2
16	006237-0.750	1/4"-20 X 3/4" F.C.S.H.C.S.	4
17	006256-1.500	RHMS, #8-32 X 1-1/2 SLOTTED	3
18	006257-1.750	RHMS, #10-24 X 1-3/4 SLOTTED	8
19	006262-00001	SCREW, DRIVE HD RD. #4 X 1/4"	2
20	006402-00000	1/4"-20 NYLOK LOCKNUT	4
21	006406-00000	1/2"-13 LOCKNUT	2
22	006409-00000	3/4"-10 LOCKNUT	4
23	006653-00000	NUT, HEX #8-32 NC THREAD	3
24	006654-00000	NUT, HEX #10-24 NC THREAD	8
25	010280-00023	WIRELESS CONTROLLER MODULE	1
26	010969-00000	DIE-CAST GRAB HANDLE	1
27	011616-00002	MANIFOLD MOUNTING PLATE	1
28	012611-00000	COUNTER WEIGHT	9
29	012634-00003	BASE PANEL	1
30	012694-00000	MAINFOLD MOUNT	1
31	012973-00000	QUICK LINCH PIN	1
32	013055-00006	VALVE MOUNT	1
33	013183-00001	FRAME CROSS BRACKET	1
34	013597-00001	BOOSTER MOUNT	1
35	013597-00002	BOOSTER MOUNT	1
36	013598-00000	ASSEMBLY, WIRELESS CONTROL PANEL	1
37	013599-00000	ASSEMBLY, WIRELESS CONTROL PANEL	1
38	0A5934-00005	ASSEMBLY, CASTER MOUNTING	1
39	0A6964-00003	ASSEMBLY, POINTER	1
40	0A7927-022WD	ASSEMBLY, LIFT GROUP A-5SC W/DUST	1
41	0A9350-00000	7/8" X 4-1/4" CHUCK TOYO 50# AIR DRILL	5
42	A11387-005WD	DECAL, KIT FOR: A-5SCW W/DUST	1
43	A11419-00001	ASSEMBLY, AIR VALVE	1
44	A12117-00001	ASSEMBLY, OPERATOR'S MANUAL STORAGE CANNISTER	1
45	A12200-500WD	ASSEMBLY, DUST COLLECTION FOR A-5SC ADI WIRELESS	1

ITEM NO.	PART NUMBER	DESCRIPTION	QTY.
46	A12585-00013	ASSEMBLY, A-5SCW CONTROL & LUBRICATOR	1
47	A12593-00007	ASSEMBLY, MULTI FUNCTION MANIFOLD	1
48	A12594-00009	ASSEMBLY, A-5SCW FEED MANIFOLD	1
49	A12653-00005	ASSEMBLY, A-5SCW ELECTRICAL	1
50	A13270-00004	ASSEMBLY, SPRING WHIP CABLE	5
51	A13619-00000	WELDMENT, CONTROL PANEL	1
52	A13686-00000	ASSEMBLY, 3/4/5 GANG ROLLER FRAME	1

REVISIONS

REV.	DESCRIPTION	DATE	APPROVED	ECR#
A	DUST COLLECTOR CHANGED TO A12200-500WD	08/08/2023	RJ	2023-0035
B	REMOVED (1) A10020-00009, (1) A10021-00007, (1) A10022-00009, (1) A10050-00003, AND (1) 12632-00000: REPLACED WITH (1) A13686-00000	0822/2023	RJ	2023-0038

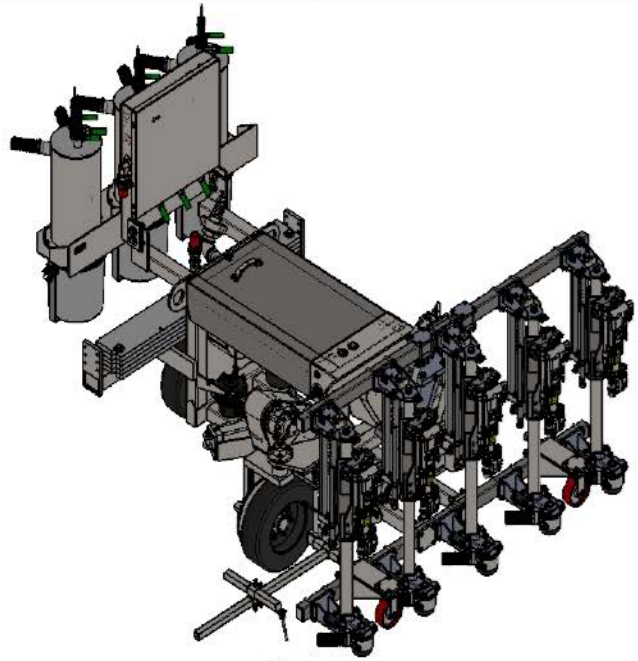

#

NOT SHOWN:
A11387-005WD DECAL, KIT FOR: A-5SC W/DUST

RAWMATERIAL | MATERIAL | STOCKSIZE

MINNICH MFG. CO., INC.

THE INFORMATION SHOWN ON THIS DRAWING IS CONFIDENTIAL TO MINNICH MFG. & OUR CUSTOMERS & SHALL NOT BE DISTRIBUTED TO THIRD PARTIES WITHOUT WRITTEN PERMISSION OF MINNICH MFG.

DO NOT SCALE DRAWING

TOLERANCES (EXCEPT AS NOTED)
.X ± .060
.XX ± .030
.XXX ± .005
X/X ± 1/16"
< ± 1°

Dimension in accordance with ANSI Y14

FIXTURE NO. | LOCATION | ROUTING NO.

TITLE: ASSEMBLY, 5-GANG WIRELESS DRILL W/DUST

DRAWING NUMBER: A12600-0035D

DRAWN BY: RJ
CHECKED BY: AEB
APPROVED BY:
ORIG. DATE: 01/28/2025
REV. LEVEL B

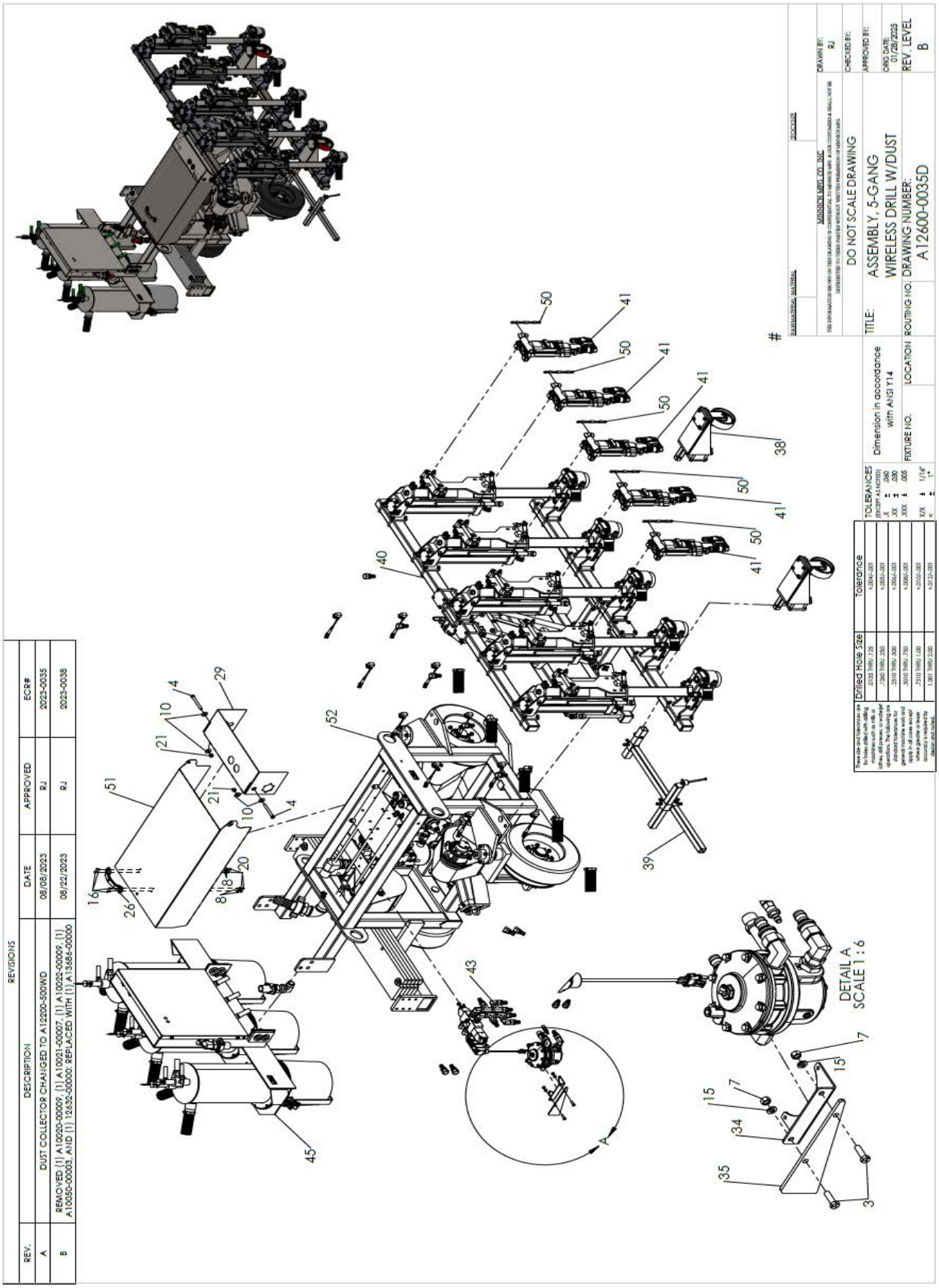
REVISIONS
REV.
DESCRIPTION
DATE
APPROVED
ECR#
A
DUST COLLECTOR CHANGED TO A12200-500WD
08/08/2023
RJ
2023-0035
B
REMOVED (1) A10020-00009, (1) A10021-00007, (1) A10022-00009, (1) A10050-00003, AND (1) 12652-00000. REPLACED WITH (1) A13686-00000
08/22/2023
RJ
2023-0038
DETAIL A
SCALE 1 : 6
TOLERANCES
(EXCEPT AS NOTED)
Dimension in accordance with ANSI Y14
FIXTURE NO.
LOCATION
DO NOT SCALE DRAWING
TITLE:
ASSEMBLY, 5-GANG WIRELESS DRILL W/DUST
ROUTING NO.
DRAWING NUMBER:
A12600-0035D
DRAWN BY:
CHECKED BY:
APPROVED BY:
REV. LEVEL
B

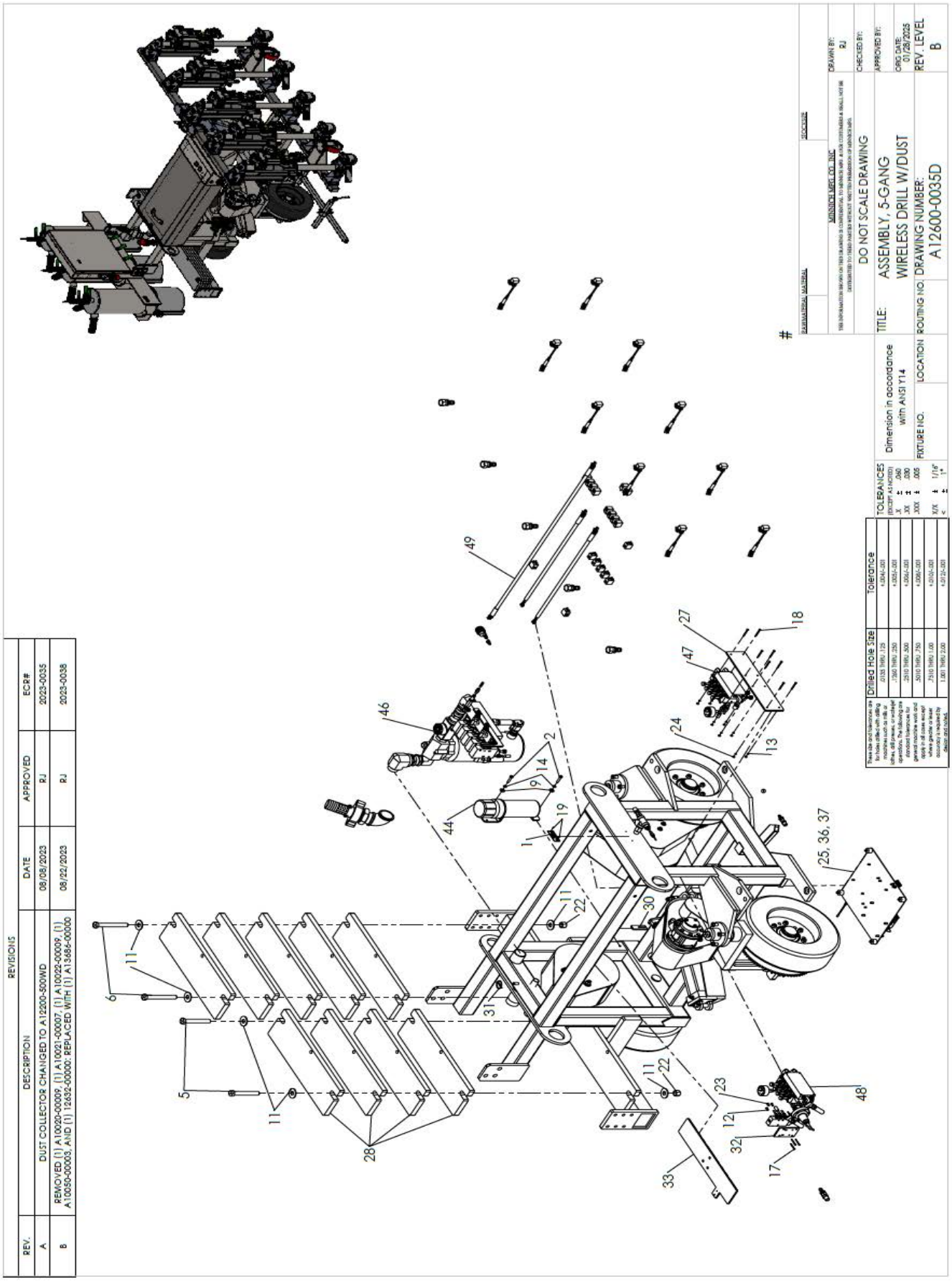
REVISIONS
REV. | DESCRIPTION | DATE | APPROVED | ECR#
A | DUST COLLECTOR CHANGED TO A12200-500WD | 08/08/2023 | RJ | 2023-0035
B | REMOVED (1) A10020-00009, (1) A10021-00007, (1) A10022-00009, (1) A10050-00003, AND (1) 12432-00000; REPLACED WITH (1) A13686-00000 | 08/22/2023 | RJ | 2023-0038
MINNICH MFG. CO., INC.
DO NOT SCALE DRAWING
TITLE: ASSEMBLY, 5-GANG WIRELESS DRILL W/DUST
DRAWING NUMBER: A12600-0035D
REV. LEVEL B
Dimension in accordance with ANSI Y14
TOLERANCES (EXCEPT AS NOTED)
Drilled Hole Size
Tolerance

ITEM NO.	PART NUMBER	DESCRIPTION	QTY.
1	798	GREASE FITTING	2
2	4463	PLATE, MOUNTING	2
3	4488	"U" BOLT	18
4	5685-2	HEIGHT ADJUSTMENT SHAFT	2
5	5691	MOUNTING PLATE	2
6	5775	PIN	5
7	5775-9	PIN	1
8	6038-4.00	HHSC, 3/8-16 X 4.00 GR.5	4
9	6038-5.00	HHCS, 3/8-16 X 5.00 GR.5	8
10	6040-1.00	HHCS, 1/2-13 X 1.00" GR.5	2
11	6040-1.25	HHCS, 1/2-13 X 1-1/4 GR.5	2
12	6040-4.00	HHCS, 1/2"-13 X 4.00"	8
13	6112	1/2 FLAT WASHER	2
14	6151	1/2" LOCK WASHER	4
15	006155-00000	3/4" LOCK WASHER	4
16	6174-1.00	COTTER PIN 1/8" X 1"	12
17	6296-2	BUSHING, REDUCER PIPE 08-04	2
18	6345	3/8"-24 LOCKNUT	36
19	6404	LOCKNUT 3/8"	12
20	6406	1/2-13 LOCK NUT	8
21	6469-7	5/8"-18 HEX NUT	2
22	6469-7-LH	NUT, HEX, 5/8"-18	2
23	6470-8	NUT, HEX JAM 3/4-10	2
24	6535-1.25	PIN, SPRING 1/4 X 1-1/4	2
25	6824-5	TIE ROD	1
26	7132-1	COATED NUT, COIL STYLE THREAD	4
27	7264	PIN, TENSION LOCK TOGGLE	1
28	7342-1	ROD, EYE RH	2
29	7343-1	ROD, EYE LH	2
30	8351-4	ANCHOR TUBE	1
31	10829-10	1/4 NPT PIPE	2
32	11992-16	7 in CYLINDER x 16IN STROKE	1
33	13363-2	STAY ROD TUBE	2
34	A5542-1	HANGER PIN WELDMENT	2
35	A5692-16	WELDMENT, RAIL ROTATING ARM	2
36	A5938-1	ANCHOR WELDMENT	2
37	A5941-1	ADJUSTMENT SCREW WELDMENT	1
38	A5941-10	ADJ. SCREW WELDMENT	1
39	A7958-2	RETAINER BAR WELDMENT	1
40	A7960-1	ADJUSTMENT ROD WELDMENT	2
41	A9999-1	WELDMENT, LIFT ANCHOR ADAPTOR	1
42	A11738-2	WELDMENT, ANCHOR	1
43	A11744-28WD	RAIL ASSY 28 IN STROKE WIRELESS	5
44	A11937-6	WELDMENT BEAM HANGER	2

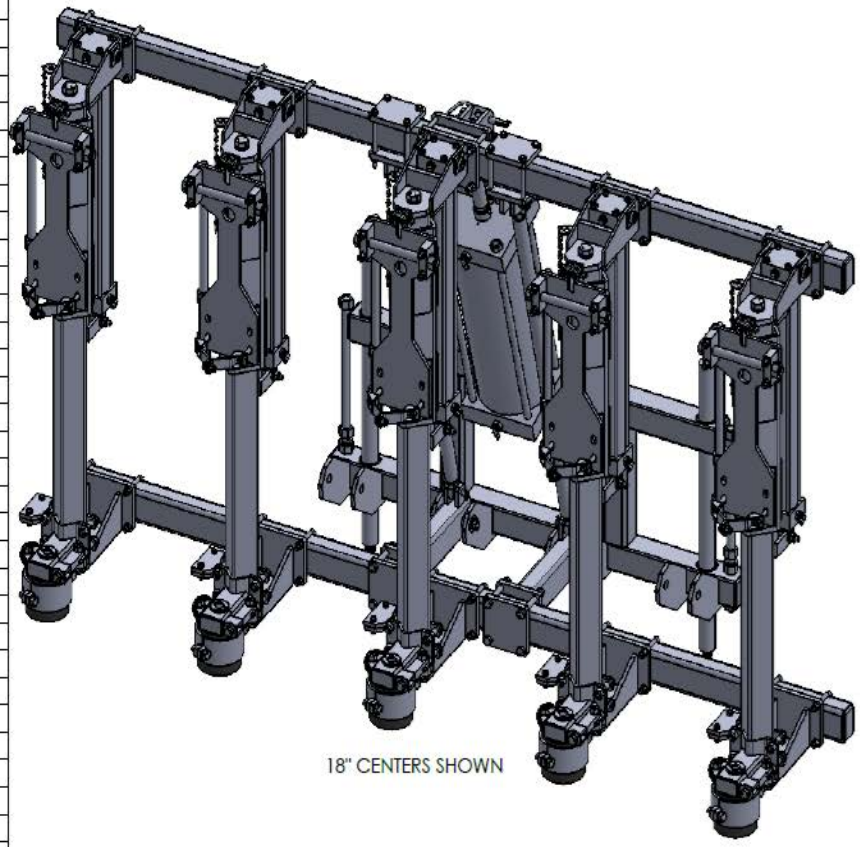

18" CENTERS SHOWN

#

RAWMATERIAL	MATERIAL	STOCKSIZE	
MINNICH MFG. CO., INC.			DRAWN BY: RJ
THIS INFORMATION SHOWN ON THIS DRAWING IS CONFIDENTIAL TO MINNICH MFG. & FOR CUSTOMERS & SHALL NOT BE DISTRIBUTED TO THIRD PARTIES WITHOUT WRITTEN PERMISSION OF MINNICH MFG.			
DO NOT SCALE DRAWING			CHECKED BY: AEB
TOLERANCES (EXCEPT AS NOTED) .X ± .060 .XX ± .030 .XXX ± .005 X/X ± 1/16" < ± 1°	Dimension in accordance with ANSI Y14	TITLE: ASSEMBLY, LIFT GROUP A-5SCW W/DUST	APPROVED BY:
			ORIG DATE: 10/30/2019
FIXTURE NO.	LOCATION	ROUTING NO.	DRAWING NUMBER: A7927-22WD
			REV. LEVEL -

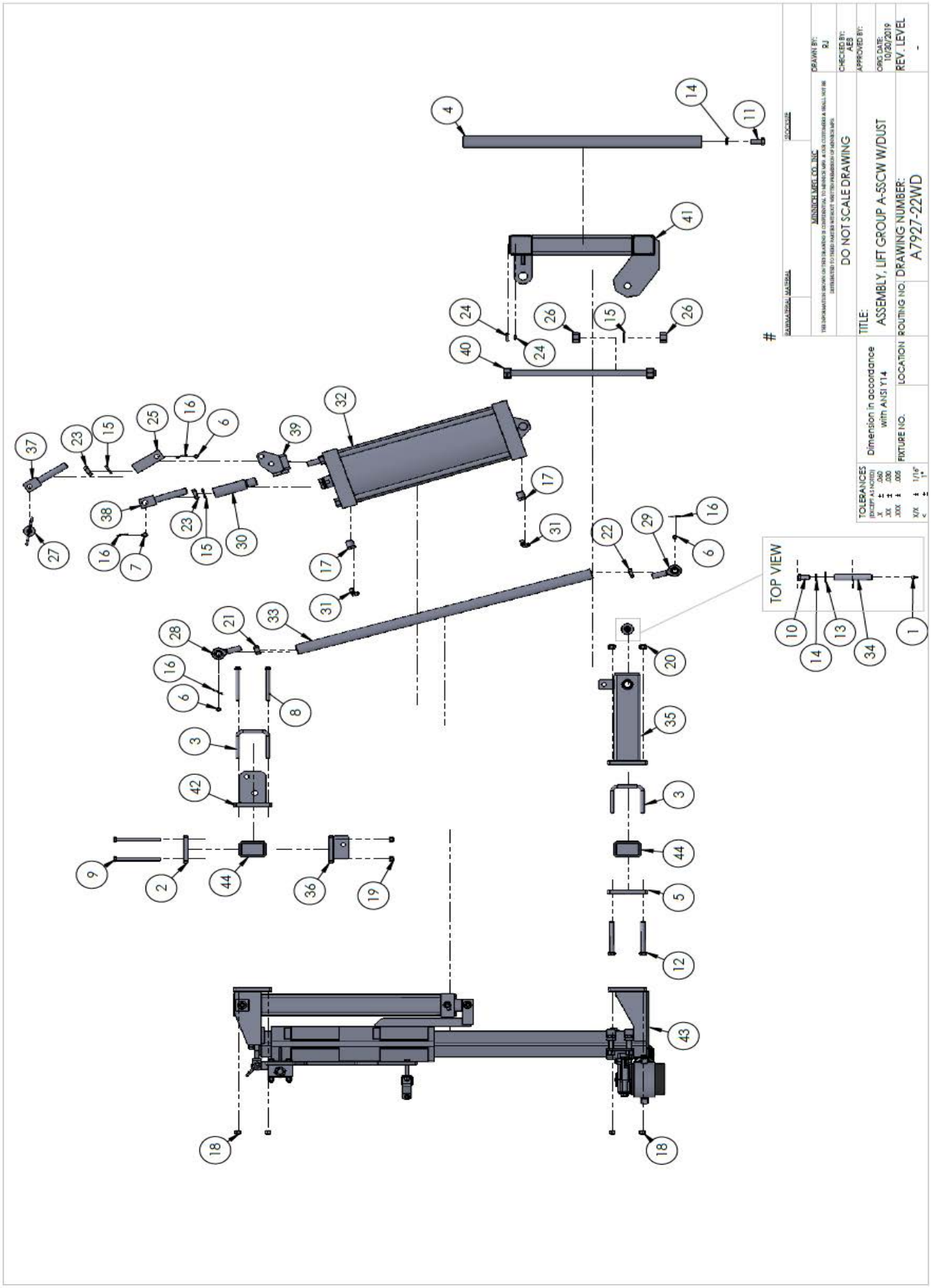
DO NOT SCALE DRAWING
TITLE:
ASSEMBLY, LIFT GROUP A-55CW W/DUST
DRAWING NUMBER:
A7927-22WD
REV: LEVEL
-
DRAWN BY:
RJ
CHECKED BY:
AEB
APPROVED BY:
ORIG DATE:
10/20/2019
TOLERANCES
Dimension in accordance with ANSI Y14
FIXTURE NO.
LOCATION
ROUTING NO.
TOP VIEW

REVISIONS				
REV.	DESCRIPTION	DATE	APPROVED	ECR#

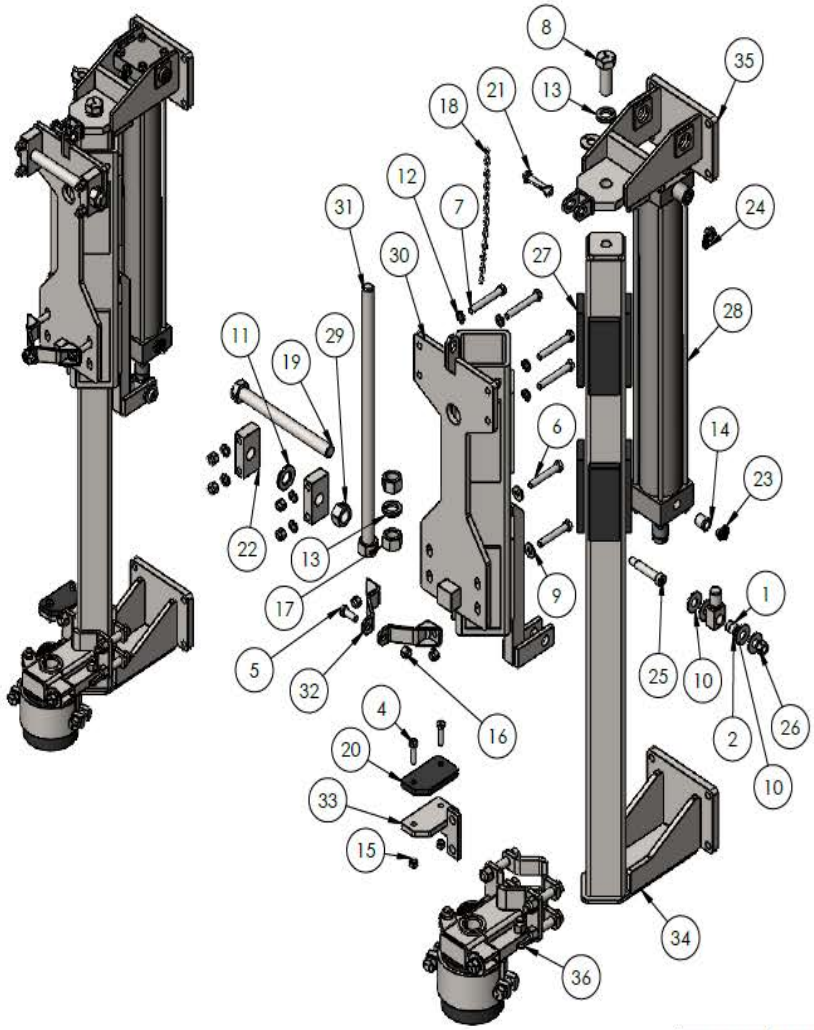

ITEM NO.	PART NUMBER	DESCRIPTION	QTY.
1	004242-00001	SPRING BUSHING	2
2	004242-00002	SPRING BUSHING	1
3	004988-00006	CYLINDER END	1
4	006037-1.250	5/16"-18 X 1-1/4" GRADE 5 H.H.C.S.	2
5	006038-1.000	3/8"-16 X 1.00" GRADE 5 H.H.C.S.	1
6	006038-2.500	3/8"-16 X 2-1/2" GRADE 5 H.H.C.S.	2
7	006038-2.750	3/8"-16 X 2-3/4" GRADE 5 H.H.C.S.	4
8	006043-2.000	3/4"-10 X 2.00" GRADE 5 H.H.C.S.	1
9	006106-00000	FLAT WASHER, 5/16 USS	2
10	006110-00000	FLAT WASHER, 7/16 USS	4
11	006117-00000	FLAT WASHER, 3/4 SAE	1
12	006149-00000	LOCKWASHER, 3/8	8
13	006155-00000	LOCKWASHER, 3/4	2
14	006296-00001	06-04 REDUCER PIPE BUSHING	1
15	006403-00000	5/16"-18 NYLOK LOCKNUT	2
16	006404-00000	3/8"-16 NYLOCK LOCKNUT	7
17	007132-00001	COIL STYLE THREAD NUT	2
18	007282-00000	#12 SINGLE JACK CHAIN	7.50"
19	007667-8.000	3/4"-16 X 8.00" GRADE 8 BOLT	1
20	008419-00001	STOP PAD	1
21	008479-00000	TAB LOCK PIN	1
22	010066-00003	DRILL HANDLE BRACKET	2
23	010829-00010	MALE ELBOW - 1/4" TUBE TO MALE 1/4" NPT FITTING	1
24	010829-00011	MALE ELBOW - 1/4" TUBE TO MALE 3/8" NPT FITTING	1
25	011472-00050	BOLT, SOCKET HEAD SHOULDER M12 X 1.50 X 50	1
26	011497-00000	M10 NYLON INSERT LOCKNUT	1
27	011739-00000	DRILL CARRIER BEARING	8
28	011740-0020W	2.50" X 20.00" STROKE CYLINDER (WIRERLESS)	1
29	012300-00000	3/4"-16 TORQUE LOCKNUT	1
30	0A8399-00038	WELDMENT, DRILL CARRIER (20") TOYO/TOKU	1
31	0A8422-00001	WELDMENT, ADJUSTMENT BOLT	1
32	0A9383-00000	WELDMENT, FRONT MOUNTING CLAMP	2
33	0A9754-00000	WELDMENT, STOP	1
34	A11291-00000	WELDMENT, RAIL TUBE (FOR 18" HOLES)	1
35	A11732-00000	WELDMENT, RAIL END	1
36	A12248-00001	ASSEMBLY, DRILL ROD GUIDE	1

#

RAWMATERIAL MATERIAL | STOCKSIZE

MINNICH MFG. CO., INC.

THIS INFORMATION SHOWN ON THIS DRAWING IS CONFIDENTIAL TO MINNICH MFG. & OUR CUSTOMERS & SHALL NOT BE DISTRIBUTED TO THIRD PARTIES WITHOUT WRITTEN PERMISSION OF MINNICH MFG.

DO NOT SCALE DRAWING

These dia and tolerances are for holes drilled with drilling machines such as mills or lathes, drill presses, or waterjet operations. The following are standard tolerances for general machine work and apply in all cases except where greater or lesser accuracy is required by design and noted.

Drilled Hole Size	Tolerance
.0135 THRU .125	+.004/-.001
.1260 THRU .250	+.005/-.001
.2510 THRU .500	+.006/-.001
.5010 THRU .750	+.008/-.001
.7510 THRU 1.00	+.010/-.001
1.001 THRU 2.00	+.012/-.001

TOLERANCES (EXCEPT AS NOTED)
.X ± .060
.XX ± .030
.XXX ± .005
X/X ± 1/16°
< ± 1°

Dimension in accordance with ANSI Y14

FIXTURE NO. | LOCATION | ROUTING NO.

TITLE: ASSEMBLY, 20" X 48" DRILL RAIL WIRELESS W/DUST

DRAWING NUMBER: A11744-028WD

DRAWN BY: RJ
CHECKED BY: AEB
APPROVED BY:
ORIG DATE: 03/29/2023
REV. LEVEL -

REVISIONS			
REV.	DESCRIPTION	DATE	APPROVED
A	REMOVED (1) 6040-1.50 AND (1) 6406: ADDED (1) 6040-1.25 AND (1) 6392	09/30/2021	AEB

ITEM NO.	PART NUMBER	DESCRIPTION	QTY.
1	002844-00000	HEIGHT ADJUSTMENT CLAMP	2
2	006040-1.250	HHCS, 1/2-13 x 1-1/4 GR.5	1
3	006040-1.500	HHCS, 1/2-13 x 1-1/2 GR.5	3
4	006040-2.250	HHCS, 1/2-13 x 2-1/4 GR.5	2
5	006040-2.750	HHCS, 1/2-13 x 2-3/4 GR.5	3
6	006112-00000	FLAT WASHER, 1/2 USS	1
7	006151-00000	LOCKWASHER, 1/2	3
8	006392-00000	LOCKNUT, 1/2-13 NYLOK NTE	1
9	006406-00000	LOCKNUT, 1/2-13 NYLOCK	5
10	008412-00001	RETAINER	1
11	008433-00000	1.085" DRILL SUPPORT BEARING	1
12	012316-00000	RUBBER OUTER TUBE, DUST COLLECTOR	1
13	A12243-00001	SUPPORT WELDMENT - DUST COLLECTOR	1
14	A12320-00000	TUBE CLAMPING WELDMENT	1

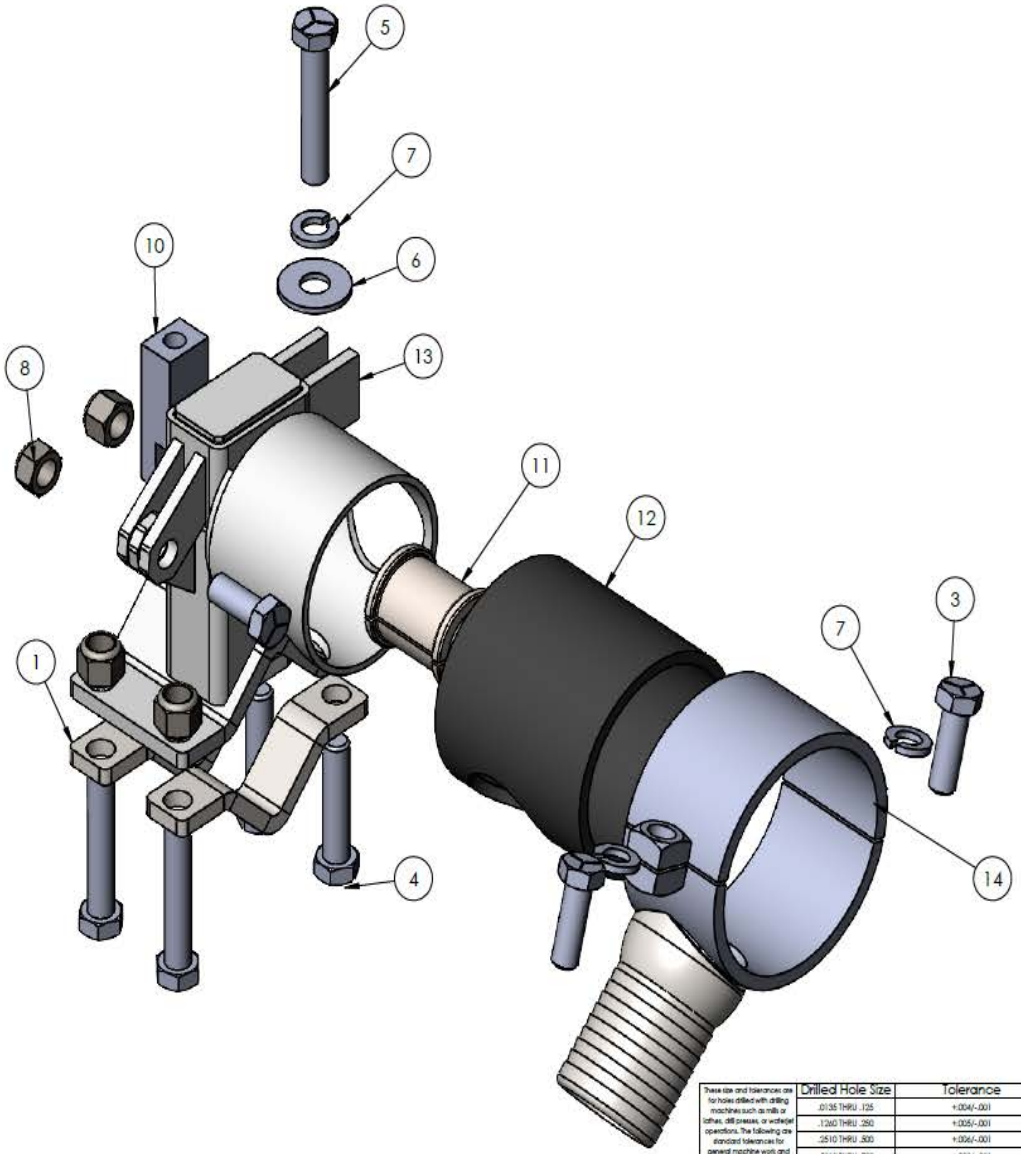

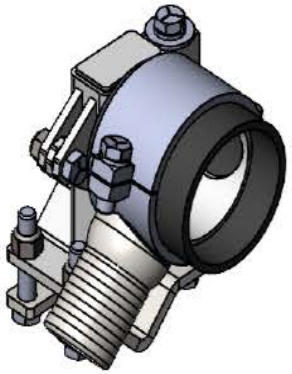

#

These size and tolerances are for holes drilled with drilling machines such as mills or lathes, drill presses, or waterjet operations. The following are standard tolerances for general machine work and apply in all cases except where greater or lesser accuracy is required by design and noted.	Drilled Hole Size	Tolerance
	.0135 THRU .125	+.004/-.001
	.1260 THRU .250	+.005/-.001
	.2510 THRU .500	+.006/-.001
	.5010 THRU .750	+.006/-.001
	.7510 THRU 1.00	+.010/-.001
	1.001 THRU 2.00	+.012/-.001

TOLERANCES (EXCEPT AS NOTED)
.X ± .060
.XX ± .030
.XXX ± .005
X/X ± 1/16"
< ± 1°

Dimension in accordance with ANSI Y14

FIXTURE NO. | LOCATION | ROUTING NO.

RAWMATERIAL MATERIAL | STOCKSIZE

MINNICH MFG. CO., INC.

THIS INFORMATION SHOWN ON THIS DRAWING IS CONFIDENTIAL TO MINNICH MFG. & OUR CUSTOMERS & SHALL NOT BE DISTRIBUTED TO THIRD PARTIES WITHOUT WRITTEN PERMISSION OF MINNICH MFG.

DO NOT SCALE DRAWING

TITLE: DRILL ROD GUIDE ASSEMBLY

DRAWING NUMBER: A12248-00001

DRAWN BY: RJ
CHECKED BY: AEB
APPROVED BY:
ORIG DATE: 03/25/2022
REV. LEVEL A

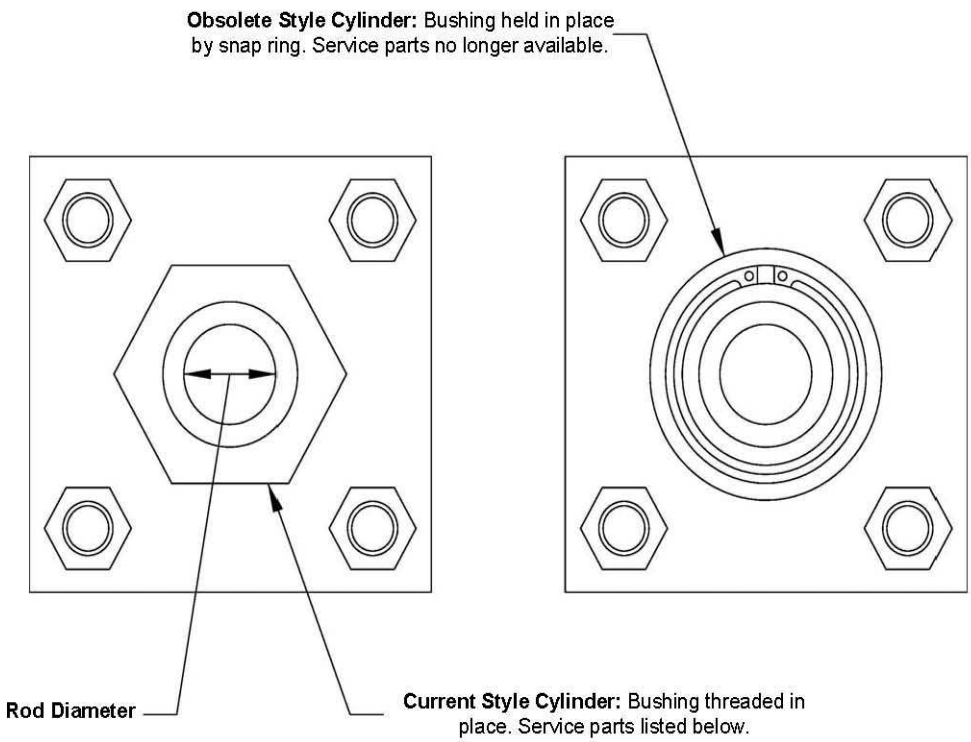

	OVERSIZE ROD CYLINDERS (FEED)		STANDARD ROD CYLINDERS	
	ROD DIAMETER	SERVICE KIT PART #	ROD DIAMETER	
1.50″ (3.81 cm) Bore			5/8″ (1.59 cm)	A12899-1.500
2.50″ (6.35 cm) Bore	1″ (2.54 cm)	A12895-2.500	5/8″ (1.59 cm)	A12899-2.500
3.25″ (8.26 cm) Bore	1 3/8″ (3.49 cm)	A12895.3.250	1″ (2.54 cm)	A12899-3.250
4.00″ (10.16 cm) Bore			1″ (2.54 cm)	A12899-4.000
5.00″ (12.70 cm) Bore			1″ (2.54 cm)	A12899-5.000
6.00″ (15.24 cm) Bore			1 3/8″ (3.49 cm)	A12899-6.000
7.00″ (17.78 cm) Bore			1 3/8″ (3.49 cm)	A12899-7.000

REVISIONS				
REV.	DESCRIPTION	DATE	APPROVED	ECR#

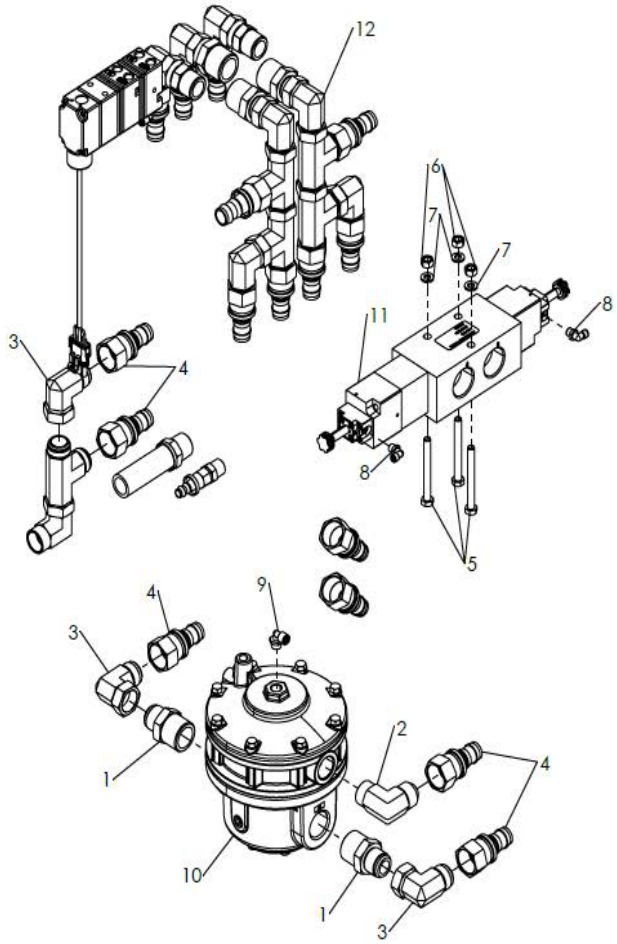

ITEM NO.	PART NUMBER	DESCRIPTION	QTY.
1	006007-00025	16-12S 37 DEG. MALE PIPE CONNECTOR	2
2	006019-00024	12-12 90 DEG EXT PIPE/ 37 DEG ELBOW	1
3	006023-00008	12-12S 37 DEG. MALE/FEMALE SWIVEL 90 DEG. ELBOW	3
4	006032-00006	12 37° FEM/SWIVEL BARBED HOSE	5
5	006037-3.000	HHCS, 5/16-18 x 3 GR.5	3
6	006071-00000	5/16"-18 HEX NUT	3
7	006148-00000	LOCKWASHER, 5/16	3
8	010829-00005	MALE ELBOW - 5/32" TUBE TO MALE 1/8" NPT FITTING	2
9	010829-00010	MALE ELBOW - 1/4" TUBE TO MALE 1/4" NPT FITTING	1
10	013597-00000	PNEUMATIC VOLUME BOOSTER	1
11	013601-00000	ASSEMBLY, AIR VALVE	1
12	A12595-00002	ASSEMBLY, TRAVEL CIRCUIT WIRELESS	1

#

RAWMATERIAL	MATERIAL	STOCKSIZE

MINNICH MFG. CO., INC.

THIS INFORMATION SHOWN ON THIS DRAWING IS CONFIDENTIAL TO MINNICH MFG. & OUR CUSTOMERS & SHALL NOT BE DISTRIBUTED TO THIRD PARTIES WITHOUT WRITTEN PERMISSION OF MINNICH MFG.

DO NOT SCALE DRAWING

TITLE: ASSEMBLY, AIR VALVE

DRAWN BY: RJ
CHECKED BY: DRH
APPROVED BY: AEB
ORIG DATE: 03/05/2019

FIXTURE NO. | LOCATION | ROUTING NO. | DRAWING NUMBER: A11419-00001 | REV. LEVEL -

Dimension in accordance with ANSI Y14

TOLERANCES (EXCEPT AS NOTED)
.X ± .060
.XX ± .030
.XXX ± .005
X/X ± 1/16"
< ± 1°

These size and tolerances are for holes drilled with drilling machines such as mills or lathes, drill presses, or waterjet operations. The following are standard tolerances for general machine work and apply in all cases except where greater or lesser accuracy is required by design and noted.

Drilled Hole Size	Tolerance
.0135 THRU .125	+.004/-.001
.1260 THRU .250	+.005/-.001
.2510 THRU .500	+.006/-.001
.5010 THRU .750	+.008/-.001
.7510 THRU 1.00	+.010/-.001
1.001 THRU 2.00	+.012/-.001

ITEM NO.	PART NUMBER	DESCRIPTION	QTY.
1	010918-00002	24 VOLT COIL	18
2	0A9403-00006	ASSEMBLY, 25' LONG POWER CONVERTER HARNESS	1
3	0A9403-00007	ASSEMBLY, 2' LONG POWER CONVERTER HARNESS	2
4	A12639-00000	ASSEMBLY, CYLINDER POSITION SENSOR	10

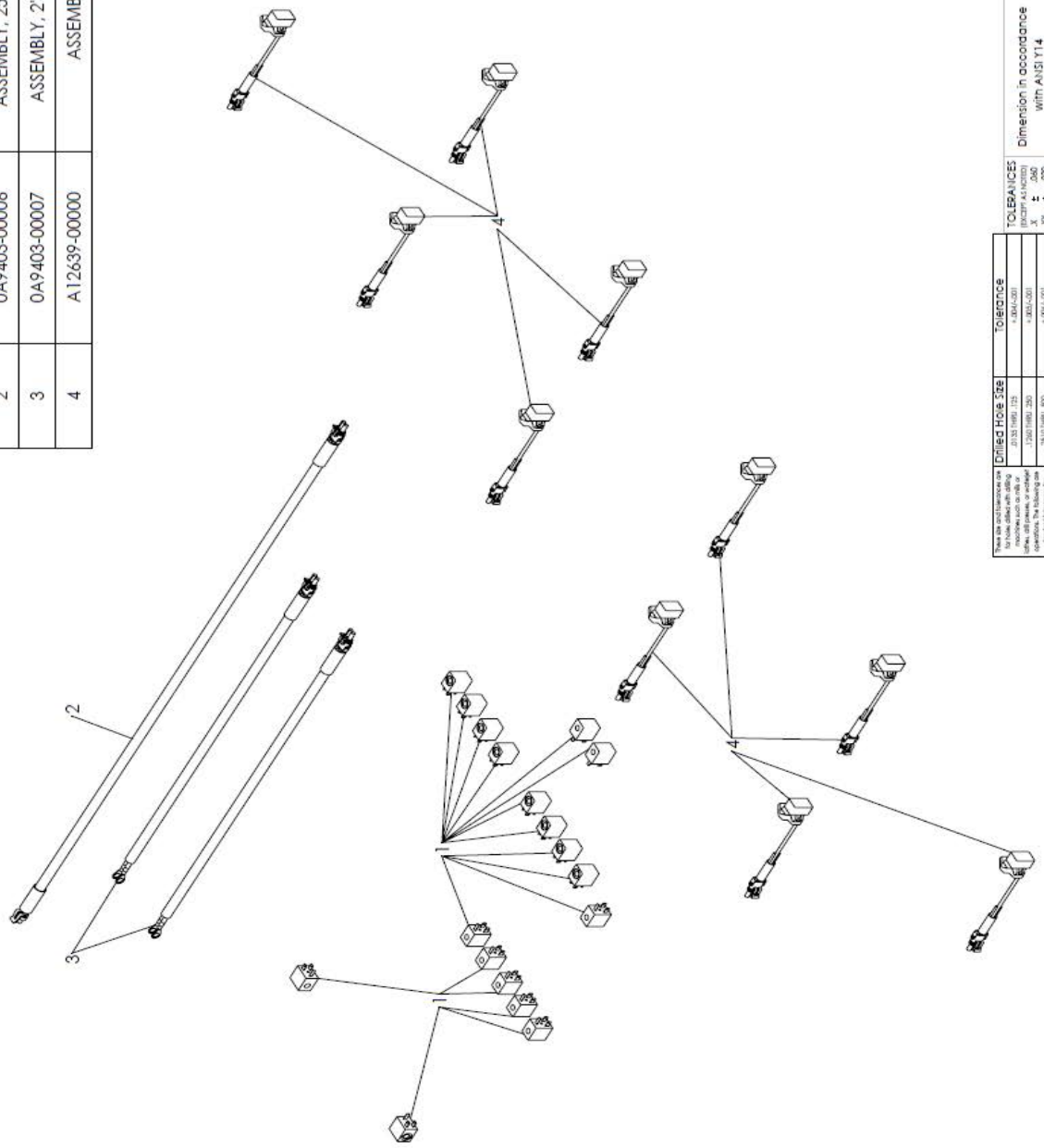

REVISIONS				
REV.	DESCRIPTION	DATE	APPROVED	ECR#

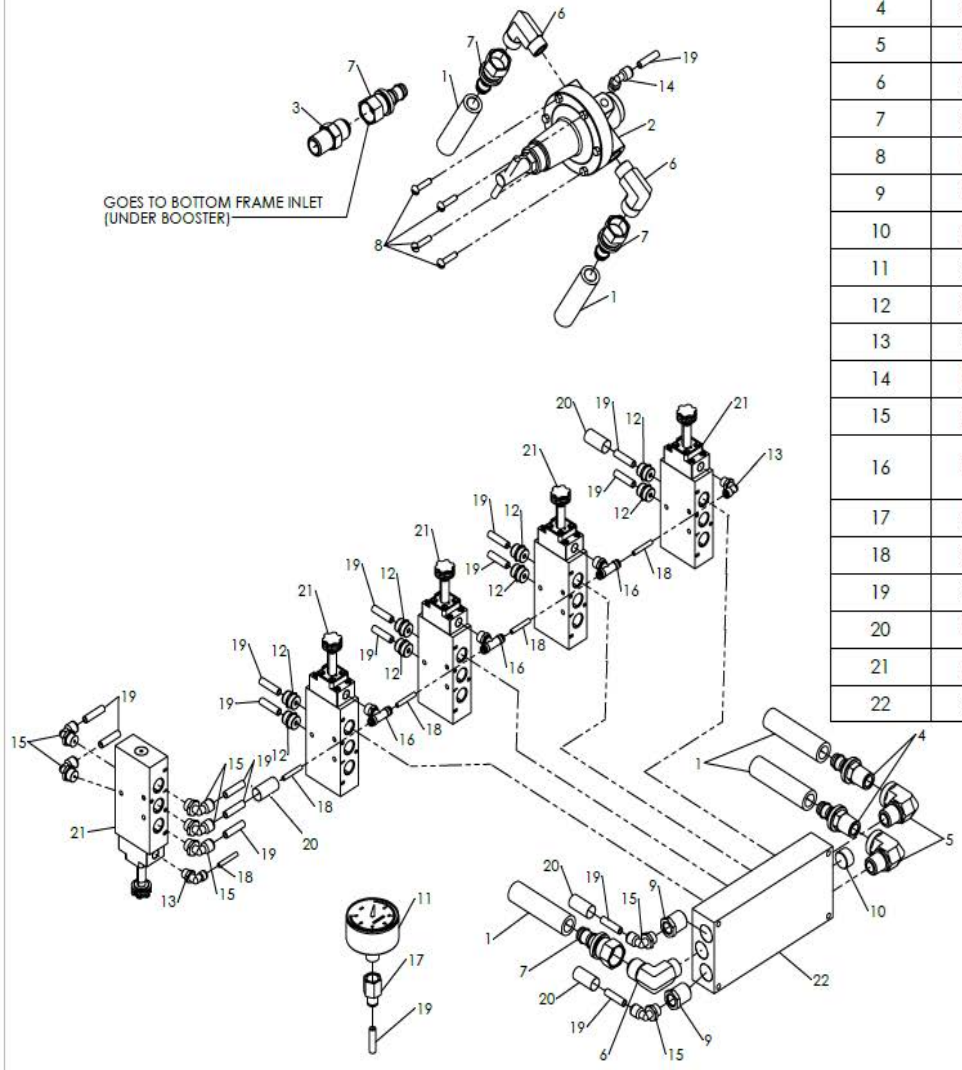

ITEM NO.	PART NUMBER	DESCRIPTION	QTY.
1	002304-00000	1/2" I.D. GREEN AIR HOSE X 180.00"	180"
2	002880-00000	AIR REGULATOR	1
3	006007-00017	8-8S 37 DEG. MALE PIPE CONNECTOR	1
4	006010-00006	06-08 MALE PIPE/BARBED BRASS HOSE END	2
5	006016-00007	6-6S 90 DEG EXT/INT PIPE ELBOW	2
6	006019-00012	06-08 90 DEG EXT PIPE/ 37 DEG ELBOW	3
7	006032-00002	08 37° FEM/SWIVEL BARBED HOSE END	4
8	006257-0.750	RHMS, #10-24 X 3/4 SLOTTED	4
9	006296-00001	06-04 REDUCER PIPE BUSHING	2
10	006471-00003	3/8" HEX SOCKET PIPE PLUG	1
11	007059-00001	0-60 PSI AIR PRESSURE GAUGE	1
12	010825-00008	1/4" TUBE TO MALE 1/4" NPT FITTING	8
13	010829-00005	MALE ELBOW - 5/32" TUBE TO MALE 1/8" NPT FITTING	2
14	010829-00009	MALE ELBOW - 1/4" TUBE TO MALE 1/8" NPT FITTING	1
15	010829-00010	MALE ELBOW - 1/4" TUBE TO MALE 1/4" NPT FITTING	7
16	010831-00004	MALE BRANCH TEE FITTING - 5/32" TUBE TO MALE 1/8" NPT TO 5/32" TUBE	3
17	010836-00007	STRAIGHT FEMALE CONNECTOR - 1/4" TUBE TO 1/4" NPT FITTING	1
18	010861-00000	5/32" NYLON TUBING X 180.00"	180"
19	010863-00000	1/4" NYLON TUBING X 1,184.00"	1,184"
20	010872-00001	1/2" EXPANDABLE SLEEVING X 643.00"	643"
21	010918-00000	FOUR WAY DIRECTIONAL VALVE	5
22	011531-00001	FOUR STATION MANIFOLD	1

RAWMATERIAL MATERIAL | STOCKSIZE

MINNICH MFG. CO. INC.

THE INFORMATION SHOWN ON THIS DRAWING IS CONFIDENTIAL TO MINNICH MFG. & OUR CUSTOMERS & SHALL NOT BE DISTRIBUTED TO THIRD PARTIES WITHOUT WRITTEN PERMISSION OF MINNICH MFG.

DO NOT SCALE DRAWING

DRAWN BY: RJ
CHECKED BY:
APPROVED BY:
ORIG DATE: 01/27/2025

TOLERANCES (EXCEPT AS NOTED)
.X ± .060
.XX ± .030
.XXX ± .005
X/X ± 1/16"
< ± 1°

Dimension in accordance with ANSI Y14

TITLE: ASSEMBLY, A-5SCW FEED MANIFOLD

FIXTURE NO. | LOCATION | ROUTING NO. | DRAWING NUMBER: A12594-00009

REV. LEVEL -

REVISIONS				
REV.	DESCRIPTION	DATE	APPROVED	ECR#

ITEM NO.	PART NUMBER	DESCRIPTION	QTY.
1	006036-1.000	HHCS, 1/4-20 x 1 GR.5	2
2	006036-3.000	HHCS, 1/4-20 x 3 GR.5	2
3	006070-00000	1/4"-20 HEX NUT	4
4	006104-00000	FLAT WASHER, 1/4 USS	6
5	006147-00000	1/4" LOCKWASHER	4
6	010872-00001	1/2" EXPANDABLE SLEEVING X 492.00"	492"
7	012695-00000	MAINFOLD MOUNT	1
8	A12592-00010	ASSEMBLY, A-5SCW DRILL MANIFOLD	1

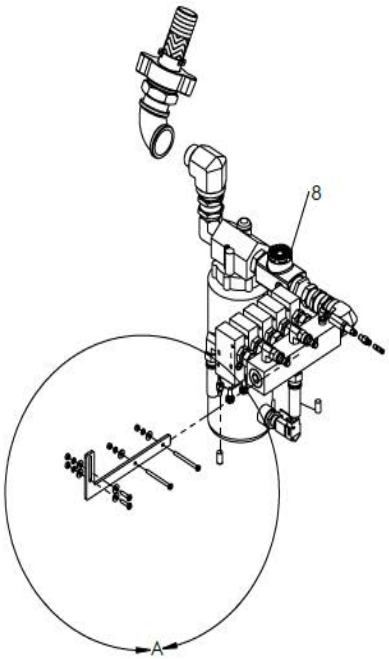

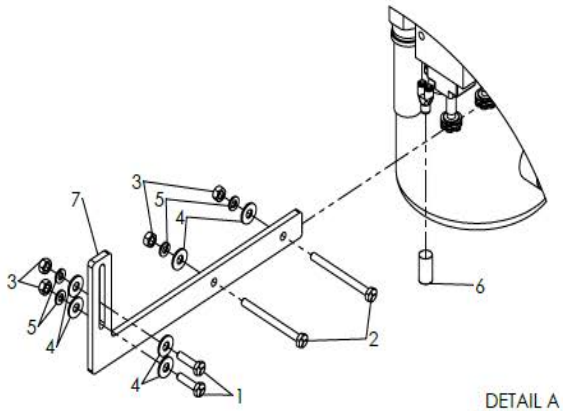

DETAIL A
SCALE 1 : 4

#

RAWMATERIAL	MATERIAL	STOCKSIZE	

MINNICH MFG. CO., INC.
THIS INFORMATION SHOWN ON THIS DRAWING IS CONFIDENTIAL TO MINNICH MFG. & OUR CUSTOMERS & SHALL NOT BE DISTRIBUTED TO THIRD PARTIES WITHOUT WRITTEN PERMISSION OF MINNICH MFG.

DRAWN BY: RJ
CHECKED BY:
APPROVED BY:
ORIG DATE: 01/28/2025

DO NOT SCALE DRAWING

TITLE: ASSEMBLY, A-5SCW CONTROL & LUBRICATOR

FIXTURE NO. | LOCATION | ROUTING NO. | DRAWING NUMBER: A12585-00013 | REV. LEVEL -

These size and tolerances are for holes drilled with drilling machines such as mills or lathes, drill presses, or waterjet operations. The following are standard tolerances for general machine work and apply in all cases except where greater or lesser accuracy is required by design and noted.

Drilled Hole Size	Tolerance
.0135 THRU .125	+.004/-.001
.1260 THRU .250	+.005/-.001
.2510 THRU .500	+.006/-.001
.5010 THRU .750	+.008/-.001
.7510 THRU 1.00	+.010/-.001
1.001 THRU 2.00	+.012/-.001

TOLERANCES (EXCEPT AS NOTED)
.X ± .060
.XX ± .030
.XXX ± .005
X/X ± 1/16"
< ± 1°

Dimension in accordance with ANSI Y14

REVISIONS				
REV.	DESCRIPTION	DATE	APPROVED	ECR#
A	REMOVED (1) 006000-00012, (1) 006015-00003, AND (1) 006385-00033: ADDED (1) 006015-00004	05/04/2020	RJ	-

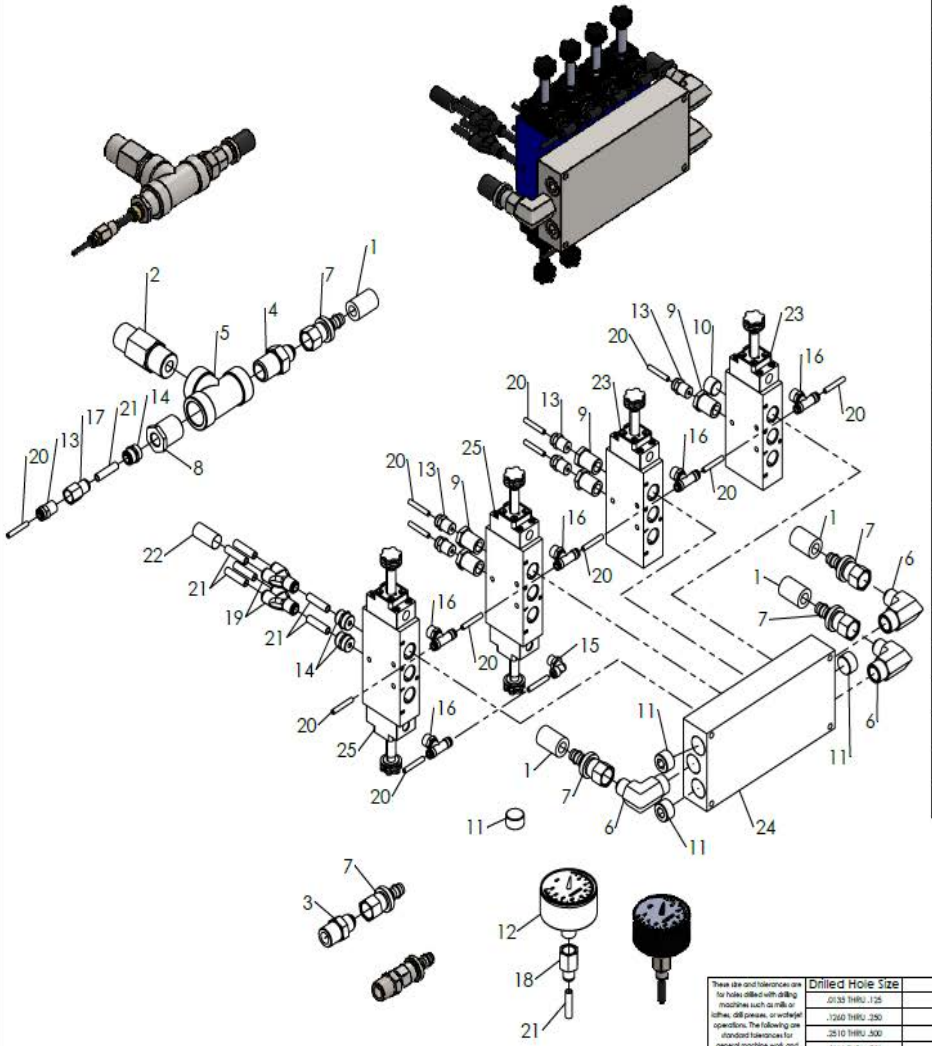

ITEM NO.	PART NUMBER	DESCRIPTION	QTY.
1	001807-00000	3/8" AIR HOSE X 220.00"	220"
2	004955-00003	FILTER	1
3	006007-00012	6-6S 37 DEG. MALE PIPE CONNECTOR	1
4	006007-00016	8-6S 37 DEG. MALE PIPE CONNECTOR	1
5	006015-00004	8-8S INTERNAL PIPE TEE	1
6	006019-00011	06-06 90 DEG EXT PIPE/ 37 DEG ELBOW	3
7	006032-00005	06 37° FEM/SWIVEL BARBED HOSE END	5
8	006296-00002	08-04 REDUCER PIPE BUSHING	1
9	006296-00016	BUSHING, REDUCER PIPE 04-02	5
10	006471-00002	1/4" HEX SOCKET PIPE PLUG	1
11	006471-00003	3/8" HEX SOCKET PIPE PLUG	4
12	007059-00000	0-160 PSI AIR PRESSURE GAUGE	1
13	010825-00003	5/32" TUBE TO MALE 1/8" NPT FITTING	6
14	010825-00008	1/4" TUBE TO MALE 1/4" NPT FITTING	3
15	010829-00005	MALE ELBOW - 5/32" TUBE TO MALE 1/8" NPT FITTING	1
16	010831-00004	MALE BRANCH TEE FITTING - 5/32" TUBE TO MALE 1/8" NPT TO 5/32" TUBE	5
17	010836-00006	STRAIGHT FEMALE CONNECTOR - 1/4" TUBE TO 1/8" NPT FITTING	1
18	010836-00007	STRAIGHT FEMALE CONNECTOR - 1/4" TUBE TO 1/4" NPT FITTING	1
19	010842-00002	1/4" TUBE TO 1/4" TUBE "Y" FITTING	2
20	010861-00000	5/32" NYLON TUBING X 280.00"	280"
21	010863-00000	1/4" NYLON TUBING X 1,316.00"	1,316"
22	010872-00001	1/2" EXPANDABLE SLEEVING X 80.00"	80"
23	010918-00000	FOUR WAY DIRECTIONAL VALVE	2
24	011531-00001	FOUR STATION MANIFOLD	1
25	012583-00000	FIVE WAY/THREE POSTION AIR VALVE	2

#

These size and tolerances are for holes drilled with drilling machines such as mills or lathes, drill presses, or waterjet operations. The following are standard tolerances for general machine work and apply in all cases except where greater or lesser accuracy is required by design and noted.	Drilled Hole Size	Tolerance
	.0135 THRU .125	+.004/-.001
	.1260 THRU .250	+.005/-.001
	.2510 THRU .500	+.006/-.001
	.5010 THRU .750	+.008/-.001
	.7510 THRU 1.00	+.010/-.001
	1.001 THRU 2.00	+.012/-.001

TOLERANCES (EXCEPT AS NOTED)
.X ± .060
.XX ± .030
.XXX ± .005
X/X ± 1/16"
< ± 1°

Dimension in accordance with ANSI Y14

FIXTURE NO. | LOCATION | ROUTING NO.

RAWMATERIAL | MATERIAL | STOCKSIZE

MINNICH MFG. CO., INC.

THE INFORMATION SHOWN ON THIS DRAWING IS CONFIDENTIAL TO MINNICH MFG. & OUR CUSTOMERS & SHALL NOT BE DISTRIBUTED TO THIRD PARTIES WITHOUT WRITTEN PERMISSION OF MINNICH MFG.

DO NOT SCALE DRAWING

TITLE: ASSEMBLY, MULTI FUNCTION MANIFOLD

DRAWING NUMBER: A12593-00007

DRAWN BY: RJ
CHECKED BY: AEB
APPROVED BY:
ORIG DATE: 01/23/2025
REV. LEVEL: A

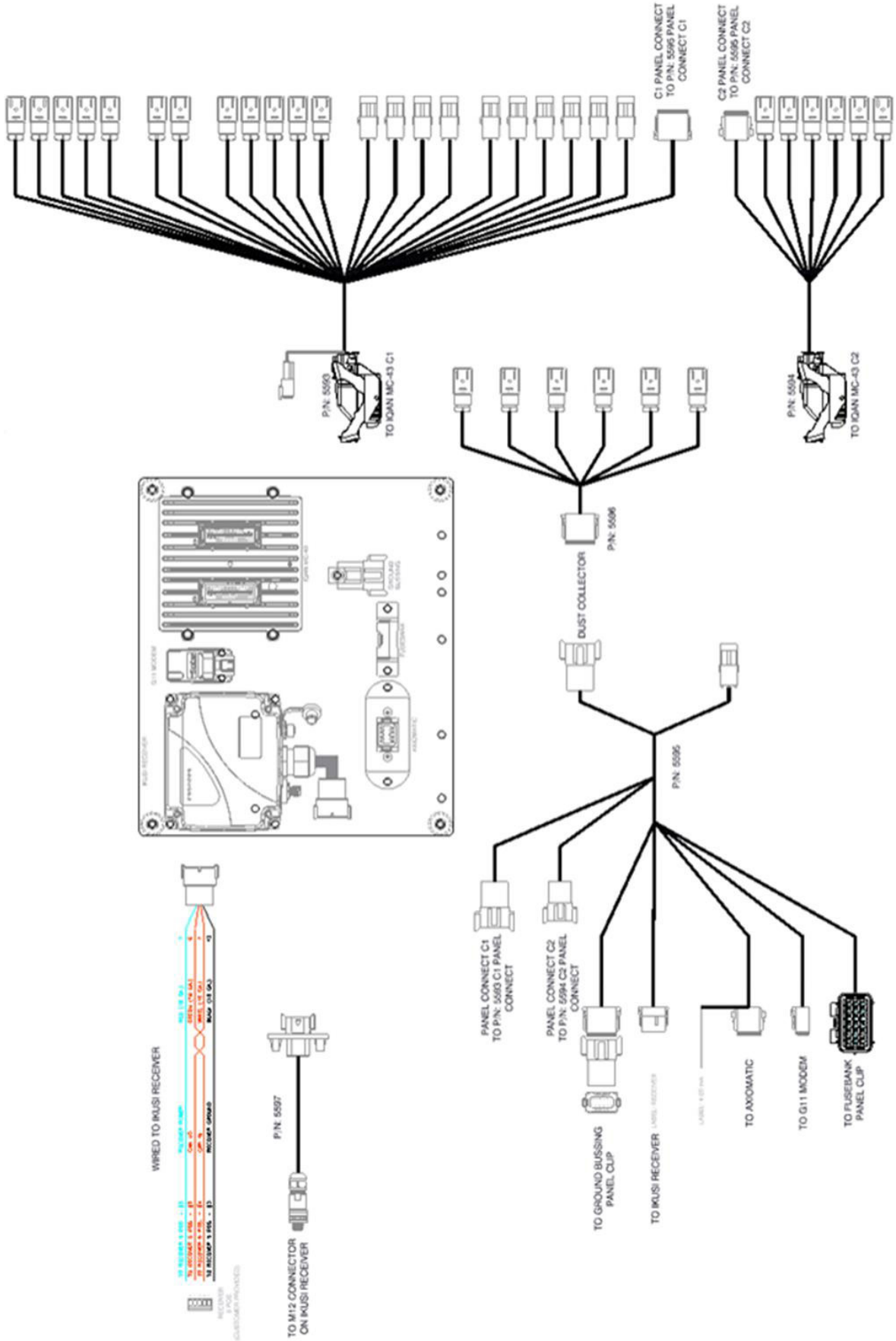
C1 PANEL CONNECT
TO P/N: 5595 PANEL
CONNECT C1
C2 PANEL CONNECT
TO P/N: 5595 PANEL
CONNECT C2
P/N: 5593
TO IQAN MC-43 C1
P/N: 5594
TO IQAN MC-43 C2
P/N: 5596
DUST COLLECTOR
P/N: 5595
PANEL CONNECT C1
TO P/N: 5593 C1 PANEL
CONNECT
PANEL CONNECT C2
TO P/N: 5594 C2 PANEL
CONNECT
TO GROUND BUSSING
PANEL CLIP
TO IKUSI RECEIVER
TO AXIOMATIC
TO G11 MODEM
TO FUSEBANK
PANEL CLIP
WIRED TO IKUSI RECEIVER
P/N: 5597
TO M12 CONNECTOR
ON IKUSI RECEIVER

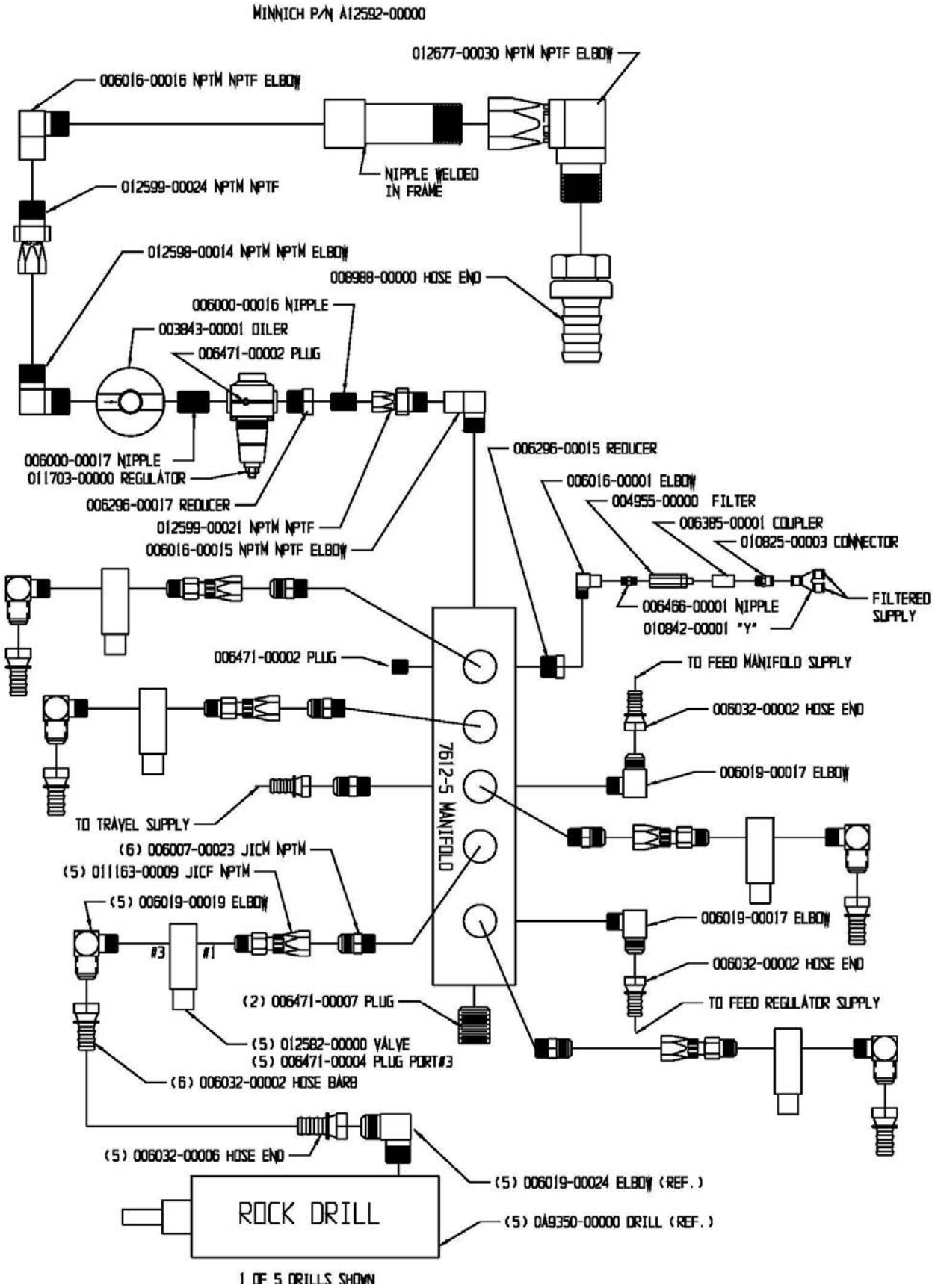
MINNICH P/N A12592-00000
012677-00030 NPTM NPTF ELBOW
006016-00016 NPTM NPTF ELBOW
NIPPLE WELDED IN FRAME
012599-00024 NPTM NPTF
012598-00014 NPTM NPTM ELBOW
008988-00000 HOSE END
006000-00016 NIPPLE
003843-00001 OILER
006471-00002 PLUG
006000-00017 NIPPLE
011703-00000 REGULATOR
006296-00017 REDUCER
012599-00021 NPTM NPTF
006016-00015 NPTM NPTF ELBOW
006296-00015 REDUCER
006016-00001 ELBOW
004955-00000 FILTER
006385-00001 COUPLER
010825-00003 CONNECTOR
006466-00001 NIPPLE
010842-00001 "Y"
FILTERED SUPPLY
006471-00002 PLUG
TO FEED MANIFOLD SUPPLY
006032-00002 HOSE END
006019-00017 ELBOW
7612-5 MANIFOLD
TO TRAVEL SUPPLY
(6) 006007-00023 JICM NPTM
(5) 011163-00009 JICF NPTM
(5) 006019-00019 ELBOW
#3
#1
006019-00017 ELBOW
006032-00002 HOSE END
TO FEED REGULATOR SUPPLY
(2) 006471-00007 PLUG
(5) 012582-00000 VALVE
(5) 006471-00004 PLUG PORT#3
(6) 006032-00002 HOSE BARB
(5) 006032-00006 HOSE END
(5) 006019-00024 ELBOW (REF.)
ROCK DRILL
(5) DA9350-00000 DRILL (REF.)
1 OF 5 DRILLS SHOWN

MULTI FUNCTION MANIFOLD ASSEMBLY

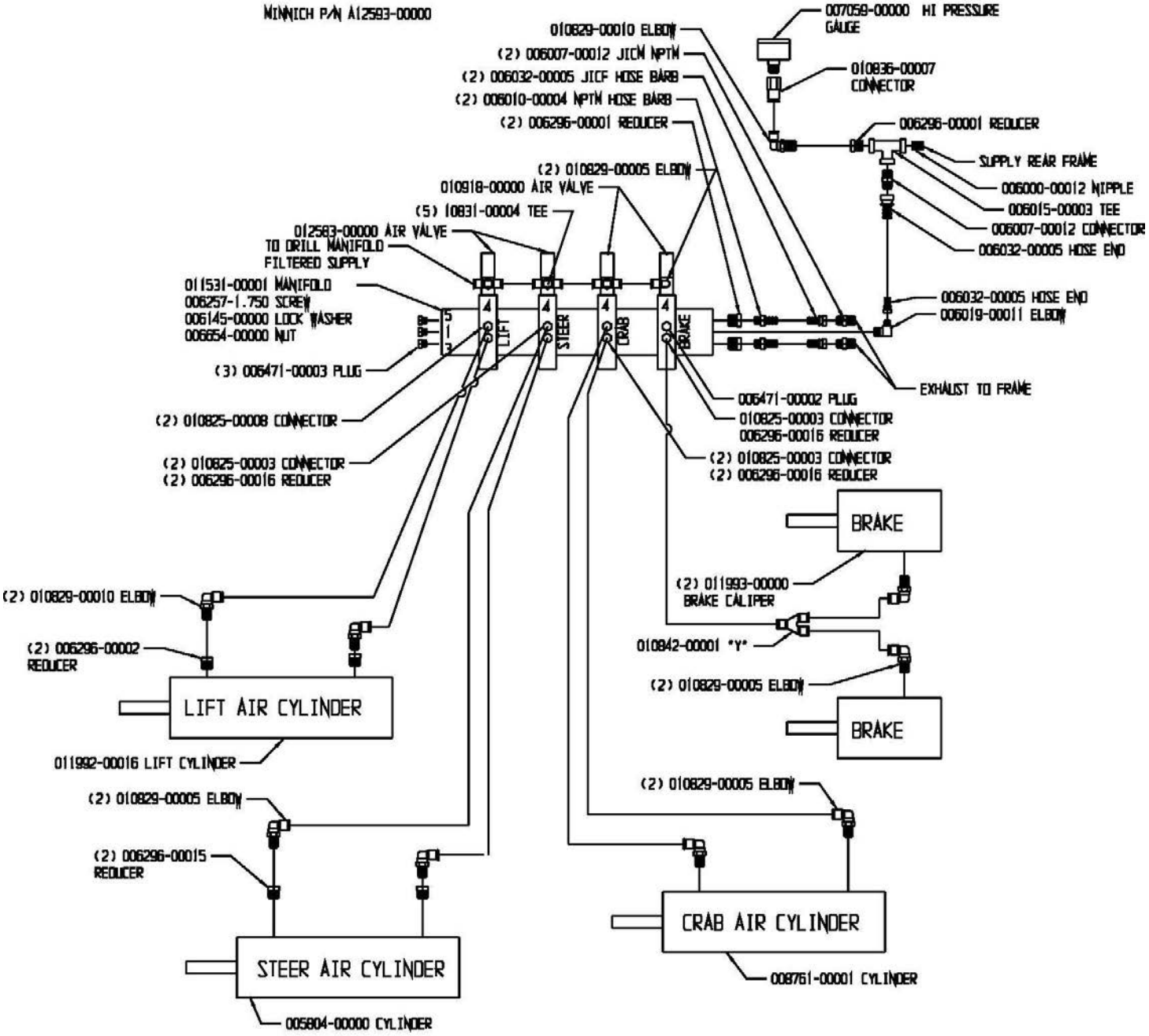

FEED MANIFOLD ASSEMBLY

MINNICH P/N A12594-00000

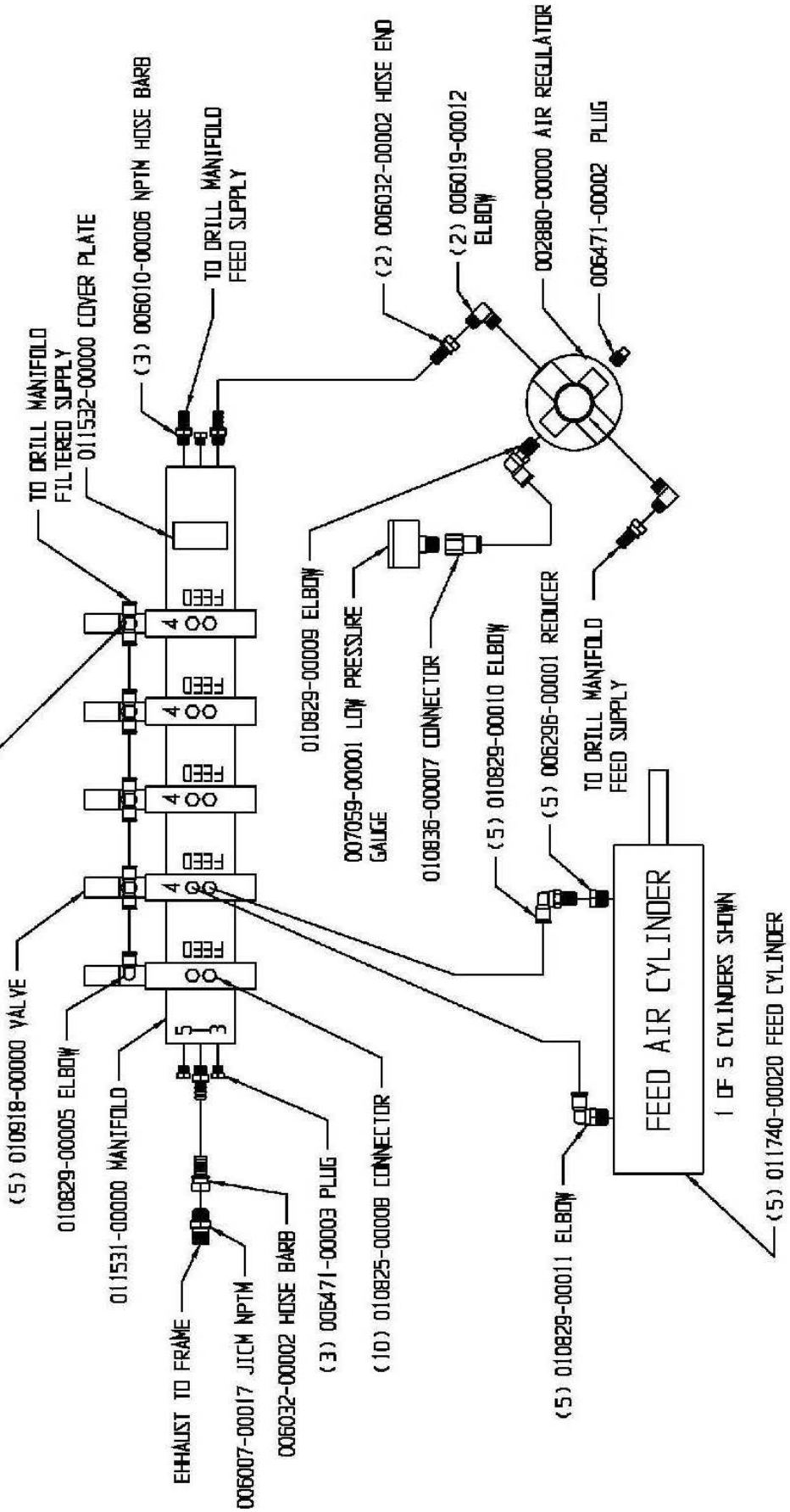

TRAVEL CIRCUIT ASSEMBLY

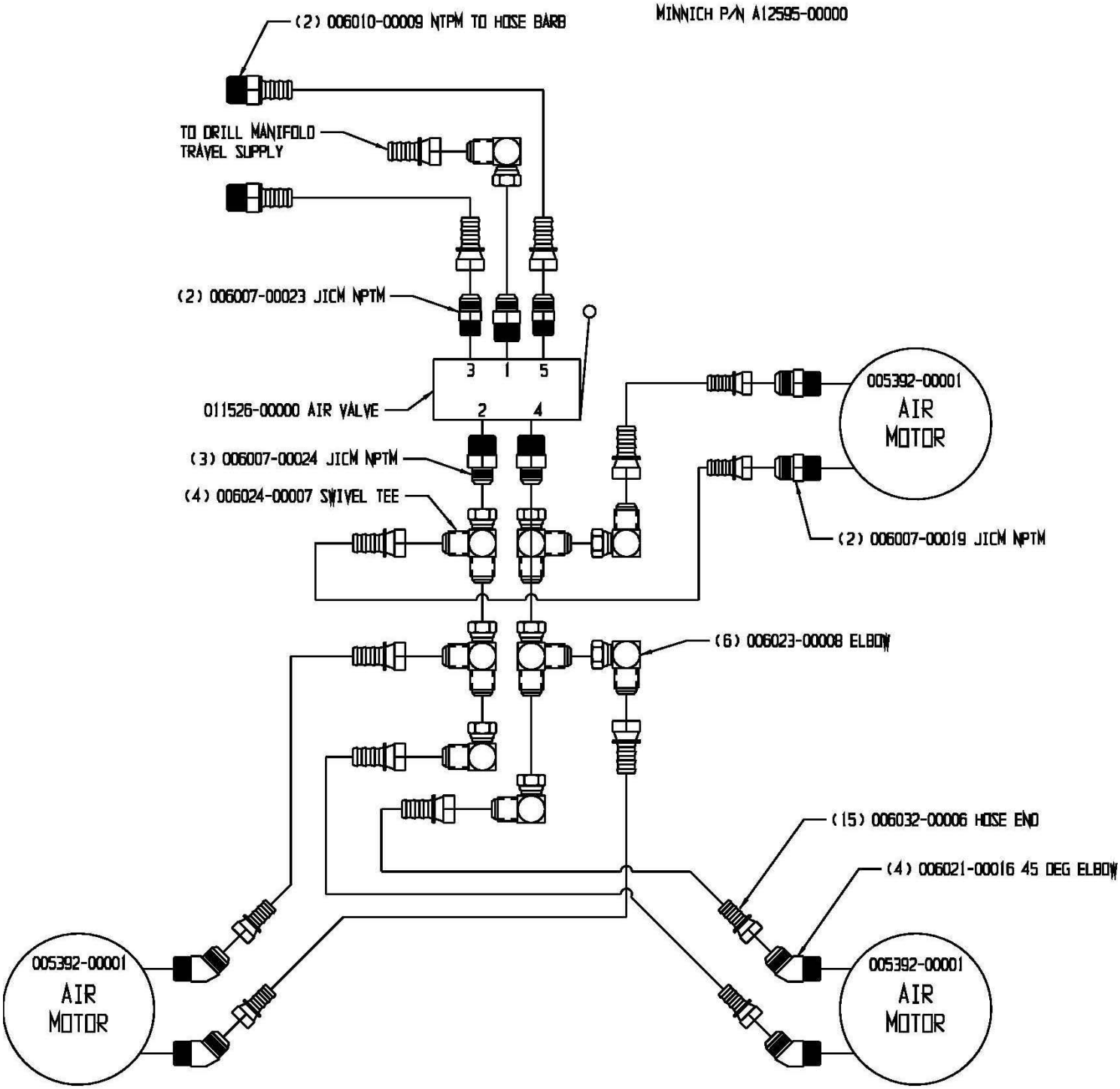

VALVES

MINNICH P/N 011549-00000

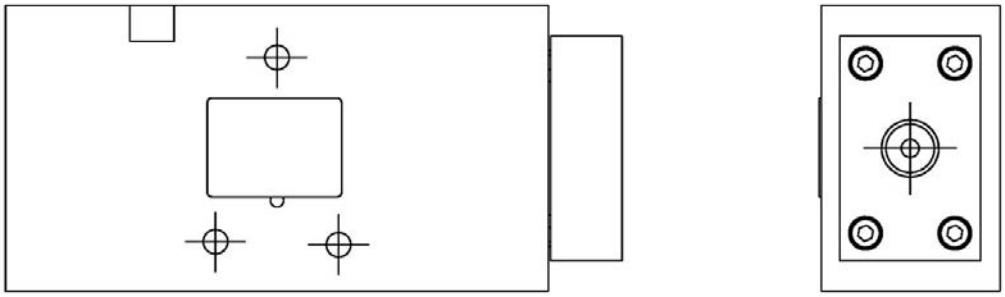

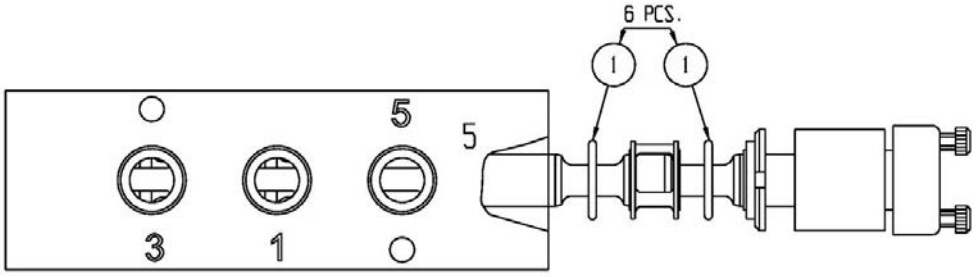

011549-00001 SEAL KIT (LUBRICATE FOR INSTALLATION)
(6 TEE SEALS & 1 PISTON SEAL)

VALVES (TRAVEL)

MINNICH P/N 011526-00000

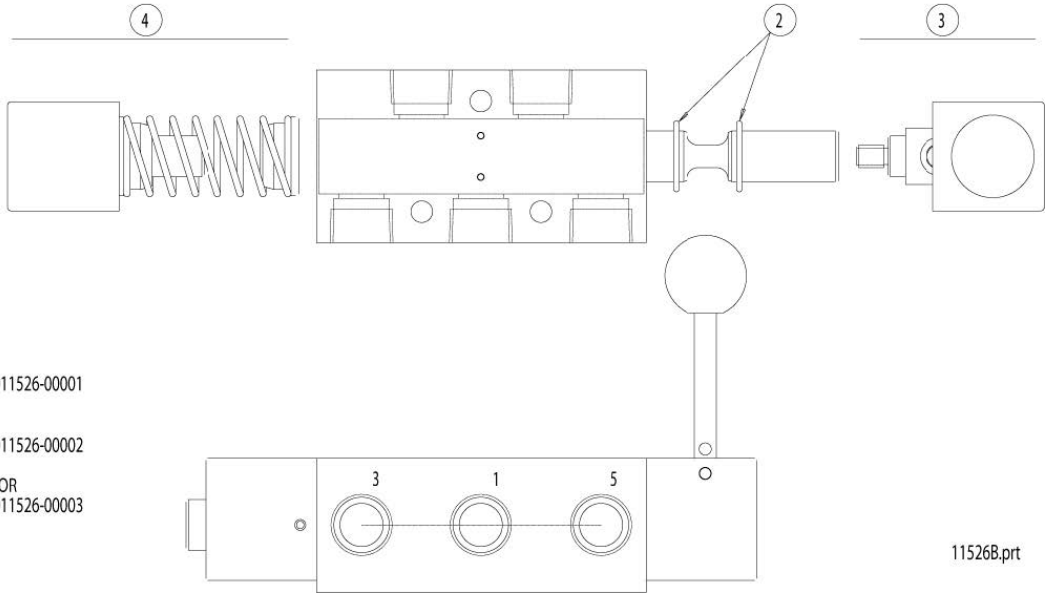

REPAIR PARTS

2 SPOOL SEALS
MINNICH P/N 011526-00001

3 HANDLEVER
MINNICH P/N 011526-00002

4 SPRING OPERATOR
MINNICH P/N 011526-00003

VALVE

MINNICH P/N 010918-00000

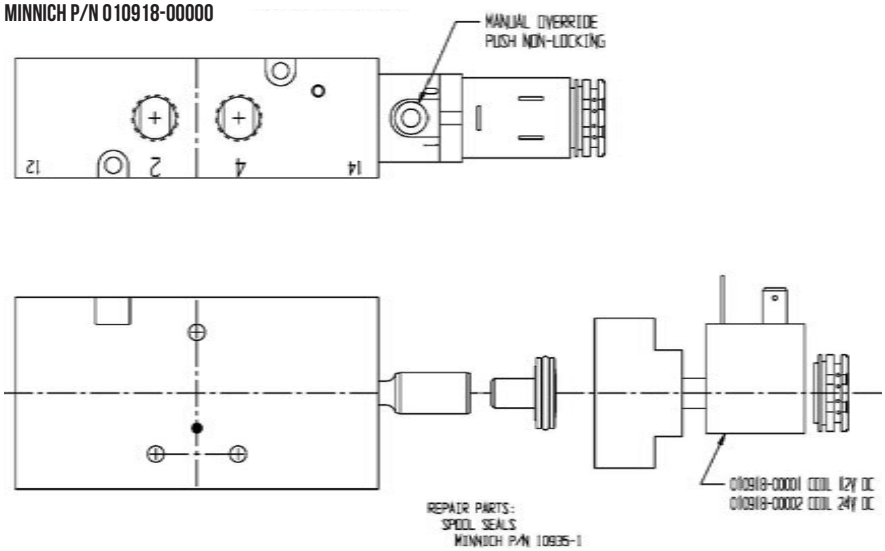

VALVE

MINNICH P/N 012583-00000

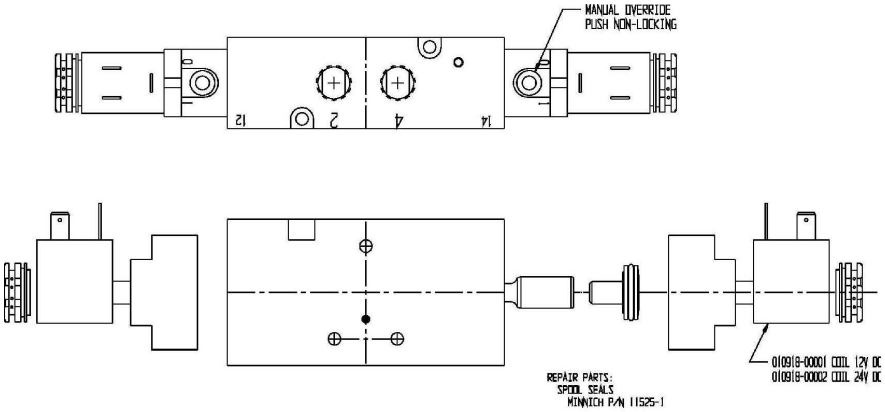

VALVE

MINNICH P/N 012582-00000

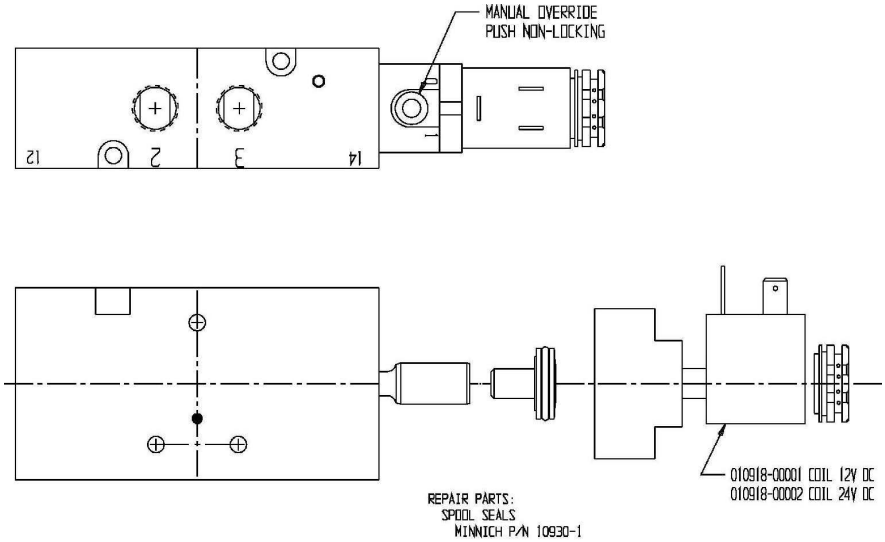

REVISIONS				
REV.	DESCRIPTION	DATE	APPROVED	ECR#
A	CHANGED B.O.M. A12087-00000 TO PURCHASED PART # 007664-2.500	12/13/2021	AEB	2021-0011
B	A10015-00003 CHANGED TO A10015-003LH	01/26/2023	RJ	2023-0010
C	0A5477-00009 DISSOLVED INTO INDIVIDUAL PARTS	02/16/2023	RJ	2023-0014

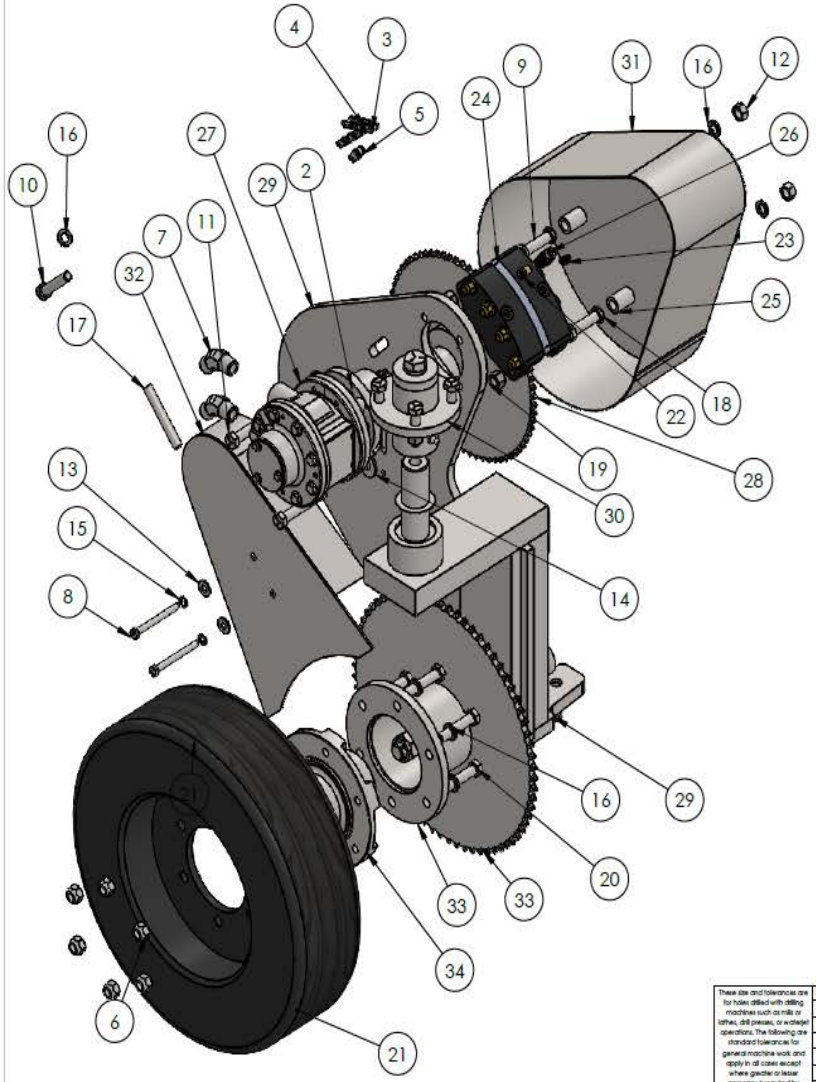

ITEM NO.	PART NUMBER	DESCRIPTION	QTY.
1	005476-00002	ROLLER CHAIN X 57.50"	57.50"
2	005476-00003	ROLLER CHAIN (COUPLER LINK)	1
3	005477-00001	#40 ASA ROLLER CHAIN	42"
4	005477-00007	#40 ASA ROLLER CHAIN (COUPLER LINK)	1
5	005477-00008	#40 ASA ROLLER CHAIN (HALF LINK)	1
6	005631-00000	1/2"-13 CONE WHEEL LUG NUT	6
7	006021-00016	8-12S 45 DEG. EXTERNAL PIPE/ 37 DEG. ELBOW	2
8	006037-3.250	5/16"-18 X 3-1/4" GRADE 5 H.H.C.S.	2
9	006040-2.000	1/2"-13 X 2.00" GRADE 5 H.H.C.S.	2
10	006040-2.500	1/2"-13 X 2-1/2" GRADE 5 H.H.C.S.	1
11	006040-3.250	1/2"-13 X 3-1/4" GRADE 5 H.H.C.S.	2
12	006074-00000	7/16" HEX NUT	3
13	006106-00000	FLAT WASHER, 5/16 USS	2
14	006112-00000	FLAT WASHER, 1/2 USS	4
15	006148-00000	LOCKWASHER, 5/16	2
16	006151-00000	LOCKWASHER, 1/2	9
17	006325-3.500	1/2" X 3-1/2" CUP POINT S.H.S.S.	1
18	006392-00000	1/2"-13 NYLOK NTE LOCKNUT	2
19	006406-00000	1/2"-13 LOCKNUT	2
20	007664-2.500	1/2"-20 X 2.50" GRADE 8	6
21	010305-00002	ASSEMBLY, TIRE & RIM	1
22	010825-00003	5/32" TUBE TO MALE 1/8" NPT FITTING	1
23	010829-00004	MALE ELBOW - 5/32" TUBE TO MALE 10-32 NPT FITTING	1
24	011993-00000	BRAKE CALIPER	1
25	012126-00002	BRAKE BUSHING	2
26	013602-00000	CHECK VALVE	1
27	0A5875-00003	ASSEMBLY, DRIVE MOTOR & SPROCKET	1
28	0A5910-00007	ASSEMBLY, REDUCTION SPROCKET	1
29	0A5917-00016	WELDMENT, L.H. DRIVE ASSEMBLY	1
30	0A5918-00002	ASSEMBLY, STEERING SPINDLE	1
31	A10015-003LH	WELDMENT, L.H. CHAIN GUARD	1
32	A11982-00000	WELDMENT, COVER	1
33	A12054-00000	WELDMENT, DRIVE HUB	1
34	A12090-00000	ASSEMBLY, HUB AND SPINDLE	1

#

These size and tolerances are for holes drilled with drilling machines such as mills or lathes, drill presses, or wafer/jet operations. The following are standard tolerances for general machine work and apply in all cases except where greater or lesser accuracy is required by design and noted.	Drilled Hole Size	Tolerance
	.0135 THRU .125	+.004/-.001
	.1260 THRU .250	+.005/-.001
	.2510 THRU .500	+.006/-.001
	.5010 THRU .750	+.008/-.001
	.7510 THRU 1.00	+.010/-.001
	1.001 THRU 2.00	+.012/-.001

TOLERANCES (EXCEPT AS NOTED)
.X ± .060
.XX ± .030
.XXX ± .005
X/X ± 1/16"
< ± 1°

Dimension in accordance with ANSI Y14

FIXTURE NO. | LOCATION | ROUTING NO.

RAWMATERIAL MATERIAL | STOCKSIZE

MINNICH MFG. CO. INC.

THIS INFORMATION SHOWN ON THIS DRAWING IS CONFIDENTIAL TO MINNICH MFG. & OUR CUSTOMERS & SHALL NOT BE DISTRIBUTED TO THIRD PARTIES WITHOUT WRITTEN PERMISSION OF MINNICH MFG.

DO NOT SCALE DRAWING

TITLE: ASSEMBLY, R.H. DRIVE

DRAWING NUMBER: A10020-00009

DRAWN BY: RJ
CHECKED BY:
APPROVED BY:
ORIG DATE: 02/16/2023
REV. LEVEL C

REVISIONS				
REV.	DESCRIPTION	DATE	APPROVED	ECR#
A	CHANGED BOM FOR A12087 TO PURCHASED PAT# 007664-2.500	12/13/2021	AEB	2021-0011
B	REMOVED (1) 008417-7.500 & (2) 006074-00000 AND ADDED (2) 0A9656-00003	01/26/2023	RJ	2023-0010
C	0A5477-00009 DISSOLVED INTO INDIVIDUAL PARTS	02/16/2023	RJ	2023-0014

ITEM NO.	PART NUMBER	DESCRIPTION	QTY.
1	005476-00002	ROLLER CHAIN	57.50"
2	005476-00003	ROLLER CHAIN (COUPLER LINK)	1
3	005477-00001	#40 ASA ROLLER CHAIN	42"
4	005477-00007	#40 ASA ROLLER CHAIN (COUPLER LINK)	1
5	005477-00008	#40 ASA ROLLER CHAIN (HALF LINK)	1
6	005631-00000	1/2"-13 CONE WHEEL LUG NUT	6
7	006021-00016	8-12S 45 DEG. EXTERNAL PIPE/ 37 DEG. ELBOW	2
8	006037-3.250	5/16"-18 X 3-1/4" GRADE 5 H.H.C.S.	2
9	006040-2.500	1/2"-13 X 2-1/2" GRADE 5 H.H.C.S.	1
10	006074-00000	7/16" HEX NUT	5
11	006106-00000	FLAT WASHER, 5/16 USS	2
12	006112-00000	FLAT WASHER, 1/2 USS	8
13	006148-00000	LOCKWASHER, 5/16	2
14	006151-00000	LOCKWASHER, 1/2	11
15	006325-3.500	1/2" X 3-1/2" CUP POINT S.H.S.S.	1
16	007664-2.500	1/2"-20 X 2.50" GRADE 8	6
17	010305-00002	ASSEMBLY, TIRE & RIM	1
18	0A5875-00003	ASSEMBLY, DRIVE MOTOR & SPROCKET	1
19	0A5910-00007	ASSEMBLY, REDUCTION SPROCKET	1
20	0A5917-00015	WELDMENT, R.H. DRIVE ASSEMBLY	1
21	0A5918-00002	ASSEMBLY, STEERING SPINDLE	1
22	0A9656-00003	WELDMENT, THREADED ROD	2
23	A10015-00003	WELDMENT, R.H. CHAIN GUARD	1
24	A11982-00000	WELDMENT, COVER	1
25	A12054-00000	WELDMENT, DRIVE HUB	1
26	A12090-00000	ASSEMBLY, HUB AND SPINDLE	1

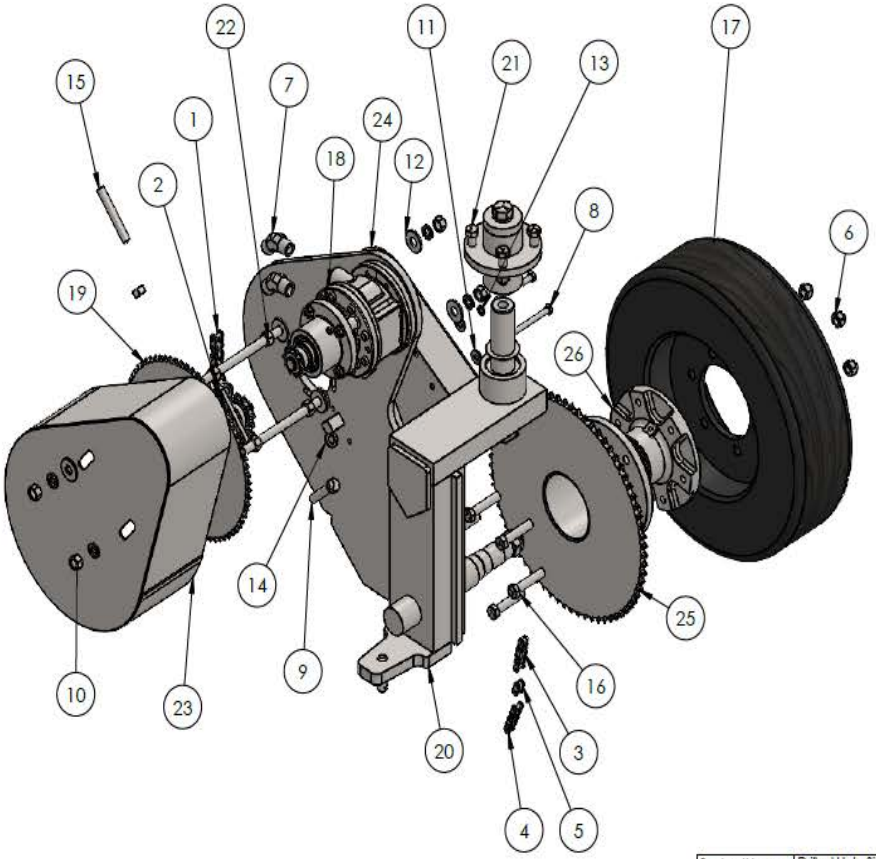

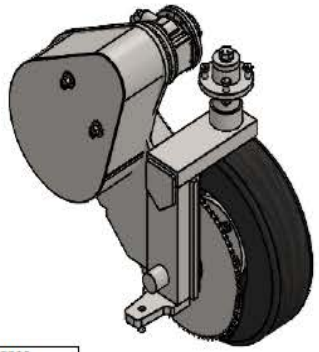

These size and tolerances are for holes drilled with drilling machines such as mills or lathes, drill presses, or waterjet operations. The following are standard tolerances for general machine work and apply in all cases except where greater or lesser accuracy is required by design and noted.	Drilled Hole Size	Tolerance
	.0135 THRU .125	+.004(-.001)
	.1260 THRU .250	+.005(-.001)
	.2510 THRU .500	+.006(-.001)
	.5010 THRU .750	+.008(-.001)
	.7510 THRU 1.00	+.010(-.001)
	1.001 THRU 2.00	+.012(-.001)

TOLERANCES (EXCEPT AS NOTED)
.X ± .060
.XX ± .030
.XXX ± .005
X/X ± 1/16"
< ± 1°

Dimension in accordance with ANSI Y14

FIXTURE NO. | LOCATION

RAWMATERIAL/MATERIAL | STOCKSIZE

MINNICH MFG. CO., INC.

THIS INFORMATION SHOWN ON THIS DRAWING IS CONFIDENTIAL TO MINNICH MFG. & OUR CUSTOMERS & SHALL NOT BE DISTRIBUTED TO THIRD PARTIES WITHOUT WRITTEN PERMISSION OF MINNICH MFG.

DO NOT SCALE DRAWING

TITLE: ASSEMBLY, FRONT LH DRIVE

ROUTING NO. | DRAWING NUMBER: A10021-00007

DRAWN BY: RJ
CHECKED BY: -
APPROVED BY: -
ORIG DATE: 3/27/2024
REV. LEVEL C

REVISIONS				
REV.	DESCRIPTION	DATE	APPROVED	ECR#
A	CHANGED BOM FOR A12087-00000 TO PURCHASED PART# 007664-2.500	12/13/2021	AEB	2021-0011
B	0A5477-00009 DISSOLVED INTO INDIVIDUAL PARTS	02/16/2023	RJ	2023-0014

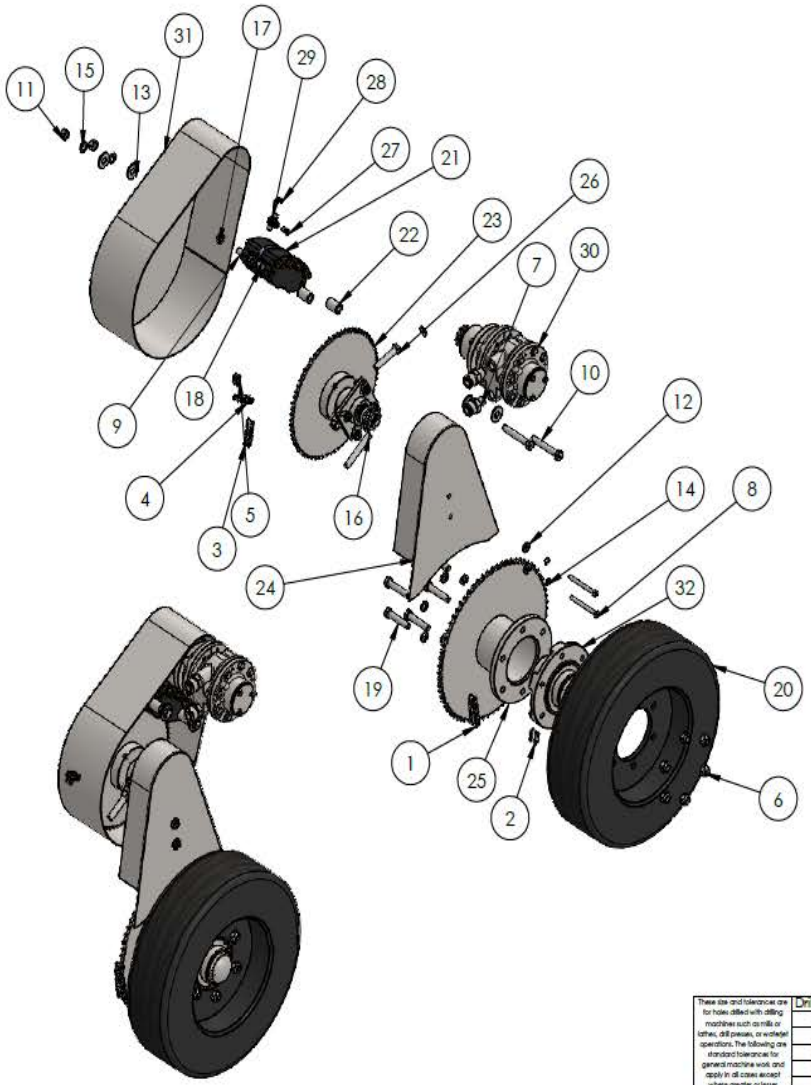

ITEM NO.	PART NUMBER	DESCRIPTION	QTY.
1	005476-00002	ROLLER CHAIN X 57.50"	57.50"
2	005476-00003	ROLLER CHAIN (COUPLER LINK)	1
3	005477-00001	#40 ASA ROLLER CHAIN	42"
4	005477-00007	#40 ASA ROLLER CHAIN (COUPLER LINK)	1
5	005477-00008	#40 ASA ROLLER CHAIN (HALF LINK)	1
6	005631-00000	1/2"-13 CONE WHEEL LUG NUT	6
7	006007-00019	8-12S 37 DEG. MALE PIPE CONNECTOR	2
8	006037-3.250	5/16"-18 X 3-1/4" GRADE 5 H.H.C.S.	2
9	006040-2.000	1/2"-13 X 2.00" GRADE 5 H.H.C.S.	2
10	006040-3.250	1/2"-13 X 3-1/4" GRADE 5 H.H.C.S.	2
11	006074-00000	7/16" HEX NUT	3
12	006106-00000	FLAT WASHER, 5/16 USS	2
13	006112-00000	FLAT WASHER, 1/2 USS	4
14	006148-00000	LOCKWASHER, 5/16	2
15	006151-00000	LOCKWASHER, 1/2	9
16	006325-3.500	1/2" X 3-1/2" CUP POINT S.H.S.S.	1
17	006392-00000	1/2"-13 NYLOK NTE LOCKNUT	2
18	006406-00000	1/2"-13 LOCKNUT	2
19	007664-2.500	1/2"-20 X 2.50" GRADE 8	6
20	010305-00002	ASSEMBLY, TIRE & RIM	1
21	011993-00000	BRAKE CALIPER	1
22	012126-00002	BRAKE BUSHING	2
23	0A5910-00007	ASSEMBLY, REDUCTION SPROCKET	1
24	A11982-00000	WELDMENT, COVER	1
25	A12054-00000	WELDMENT, DRIVE HUB	1
26	006040-2.500	1/2"-13 X 2-1/2" GRADE 5 H.H.C.S.	1
27	010825-00003	5/32" TUBE TO MALE 1/8" NPT FITTING	1
28	010829-00004	MALE ELBOW - 5/32" TUBE TO MALE 10-32 NPT FITTING	1
29	013602-00000	CHECK VALVE	1
30	0A5875-00003	ASSEMBLY, DRIVE MOTOR & SPROCKET	1
31	A10015-00003	WELDMENT, L.H. CHAIN GUARD	1
32	A12090-00000	ASSEMBLY, HUB AND SPINDLE	1

These size and tolerances are for holes drilled with drilling machines such as mills or lathes, drill presses, or waterjet operations. The following are standard tolerances for general machine work and apply in all cases except where greater or lesser accuracy is required by design and noted.

Drilled Hole Size	Tolerance
.0135 THRU .125	+.004/-.001
.1260 THRU .250	+.005/-.001
.2510 THRU .500	+.006/-.001
.5010 THRU .750	+.008/-.001
.7510 THRU 1.00	+.010/-.001
1.001 THRU 2.00	+.012/-.001

TOLERANCES (EXCEPT AS NOTED)
.X ± .060
.XX ± .030
.XXX ± .005
X/X ± 1/16"
< ± 1°

Dimension in accordance with ANSI Y14

FIXTURE NO. | LOCATION

RAWMATERIAL MATERIAL | STOCKSIZE

MINNICH MFG. CO., INC.

THE INFORMATION SHOWN ON THIS DRAWING IS CONFIDENTIAL TO MINNICH MFG. & OUR CUSTOMERS & SHALL NOT BE DISTRIBUTED TO THIRD PARTIES WITHOUT WRITTEN PERMISSION OF MINNICH MFG.

DO NOT SCALE DRAWING

TITLE: ASSEMBLY, REAR DRIVE

ROUTING NO. | DRAWING NUMBER: A10022-00009

DRAWN BY: RJ
CHECKED BY: AEB
APPROVED BY:
ORIG DATE: 3/29/2022
REV. LEVEL B

REVISIONS			
REV.	DESCRIPTION	DATE	APPROVED
A	REMOVED (1) 6489-0.375	09/14/2018	RJ

ITEM NO.	PART NUMBER	DESCRIPTION	QTY.
1	798	GREASE FITTING	1
2	6040-2.00	1/2"-13 HHCS	4
3	6043-1.50	3/4"-10 X 1.50" LONG	1
4	6155	3/4" LOCK WASHER	1
5	6406	HEX LOCK NUT 1/2-13	4
6	12092-1	RETAINER	1
7	12644	THRUST ROLLER AND CAGE ASSEMBLY	1
8	12645	THRUST BEARING WASHER	2
9	A12641	WELDMENT, HUB	1

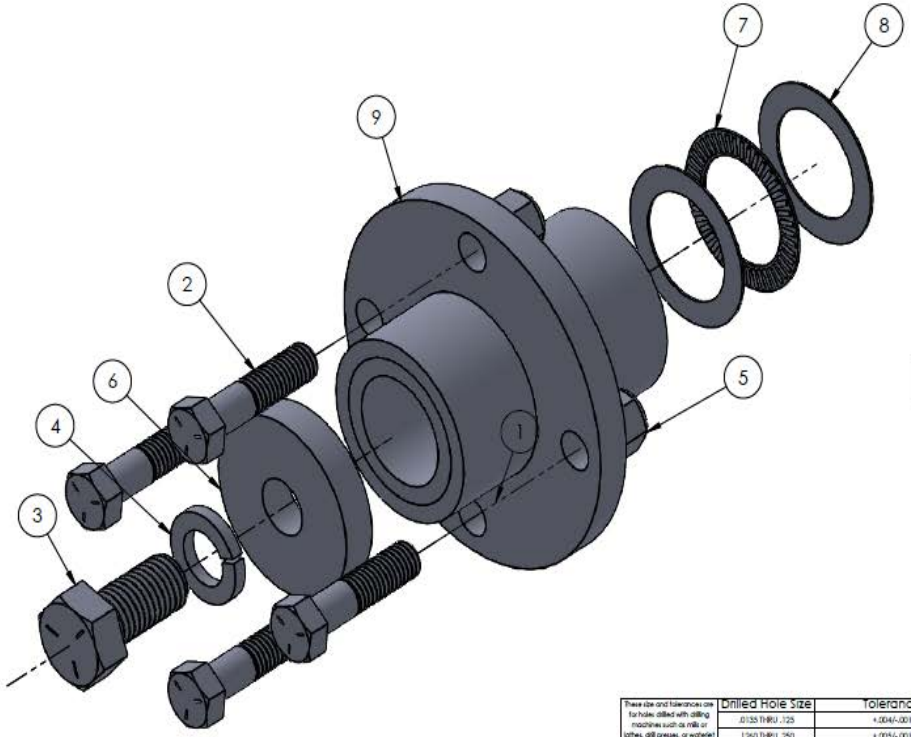

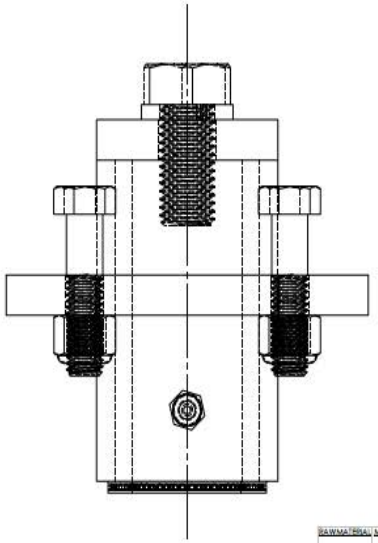

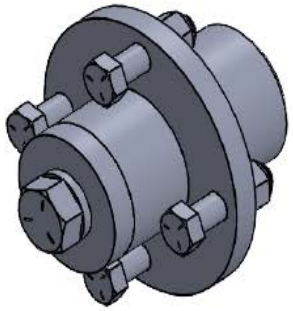

These size and tolerances are for holes drilled with drilling machines such as mills or lathes, drill presses, or workers operations. The following are standard tolerances for general machine work and apply in all cases except where greater or lesser accuracy is required by design and noted.	Drilled Hole Size	Tolerance
	.0135 THRU .125	+.004/-.001
	.1260 THRU .250	+.005/-.001
	.2510 THRU .500	+.006/-.001
	.5010 THRU .750	+.008/-.001
	.7510 THRU 1.00	+.010/-.001
	1.001 THRU 2.00	+.012/-.001

TOLERANCES (EXCEPT AS NOTED)
X ± .060
.XX ± .030
.XXX ± .005
X/X ± 1/16"
< ± 1°

Dimension in accordance with ANSI Y14

FIXTURE NO. | LOCATION | ROUTING NO.

RAWMATERIAL MATRIAL | STOCK SIZE

MINNICH MFG. CO., INC.

THIS INFORMATION SHOWN ON THIS DRAWING IS CONFIDENTIAL TO MINNICH MFG. & OUR CUSTOMERS & SHALL NOT BE DISTRIBUTED TO THIRD PARTIES WITHOUT WRITTEN PERMISSION OF MINNICH MFG.

DO NOT SCALE DRAWING

TITLE: STEERING SPINDLE ASSEMBLY

DRAWING NUMBER: A5918-2

DRAWN BY: RJ
CHECKED BY: DRH
APPROVED BY: AEB
ORIG DATE: 06/11/2018
REV. LEVEL: A

REVISIONS			
REV.	DESCRIPTION	DATE	APPROVED

ITEM NO.	PART NUMBER	DESCRIPTION	QTY.
1	A5209-2	HUB WELDMENT MACHINED	1
2	1646-2	BEARING, BALL	2
3	1941	LOCKNUT	2
4	5215-1	SPACER	1
5	5214-3	SPACER	1
6	5214-4	SPACER	1
7	5478	SPROCKET	1
8	5481-2	SPROCKET	1
9	5660-2	SHAFT, REDUCTION	1
10	6037-1.50	BOLT 5/16"18	4
11	6071	NUT, HEX 5/16-18	4
12	6106	WASHER 5/16"	8
13	6148	LOCKWASHER 5/16	4
14	12804-.875 KEY	12804-.875 SQ. KEY	2

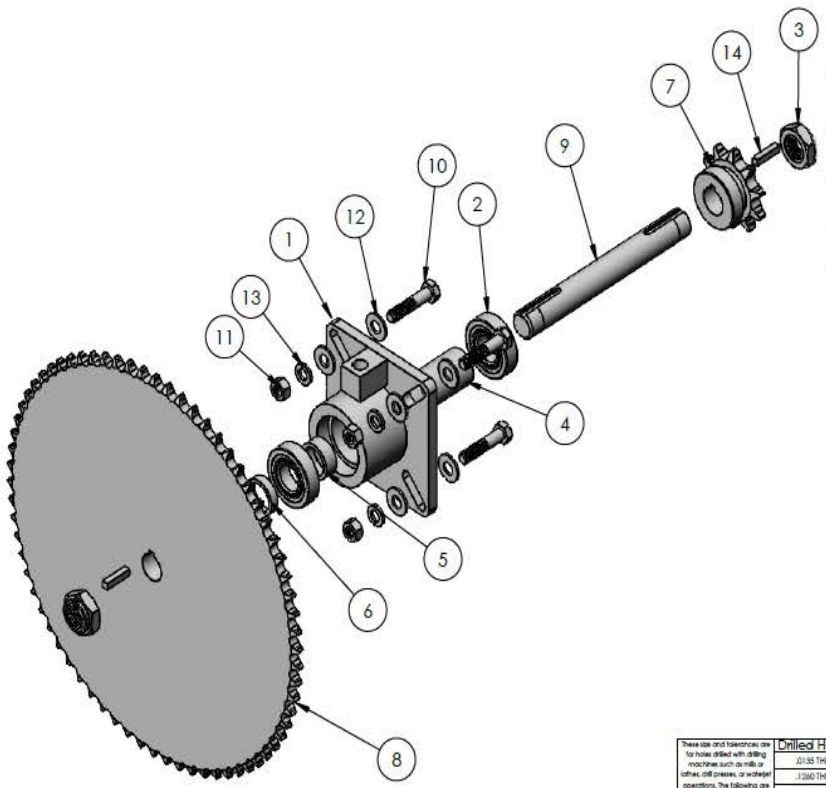

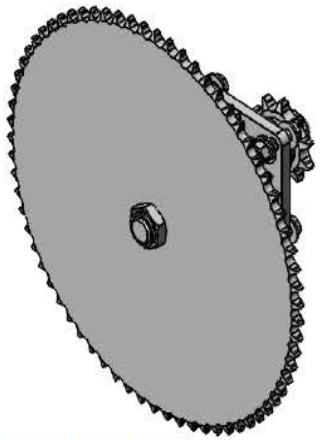

These size and tolerances are for holes drilled with drilling machines such as mills or lathes, drill presses, or waterjet operations. The following are standard tolerances for general machine work and apply in all cases except where greater or lesser accuracy is required by design and noted.

Drilled Hole Size	Tolerance
.0135 THRU .125	+.004/-.001
.1260 THRU .250	+.005/-.001
.2510 THRU .500	+.006/-.001
.5010 THRU .750	+.008/-.001
.7510 THRU 1.00	+.010/-.001
1.001 THRU 2.00	+.012/-.001

TOLERANCES (EXCEPT AS NOTED)
.X ± .060
.XX ± .030
.XXX ± .005
X/X ± 1/16"
< ± 1°

Dimension in accordance with ANSI Y14

FIXTURE NO. | LOCATION

RAWMATERIAL MATERIAL | STOCKSIZE

MINNICH MFG. CO., INC.

THE INFORMATION SHOWN ON THIS DRAWING IS CONFIDENTIAL TO MINNICH MFG. & OUR CUSTOMERS & SHALL NOT BE DISTRIBUTED TO THIRD PARTIES WITHOUT WRITTEN PERMISSION OF MINNICH MFG.

DO NOT SCALE DRAWING

TITLE: SPROCKET REDUCTION ASSEMBLY

ROUTING NO. | DRAWING NUMBER: A5910-7

DRAWN BY: RJ
CHECKED BY: DRH
APPROVED BY: AEG
ORIG DATE: 06/11/2018
REV. LEVEL -

REVISIONS			
REV.	DESCRIPTION	DATE	APPROVED

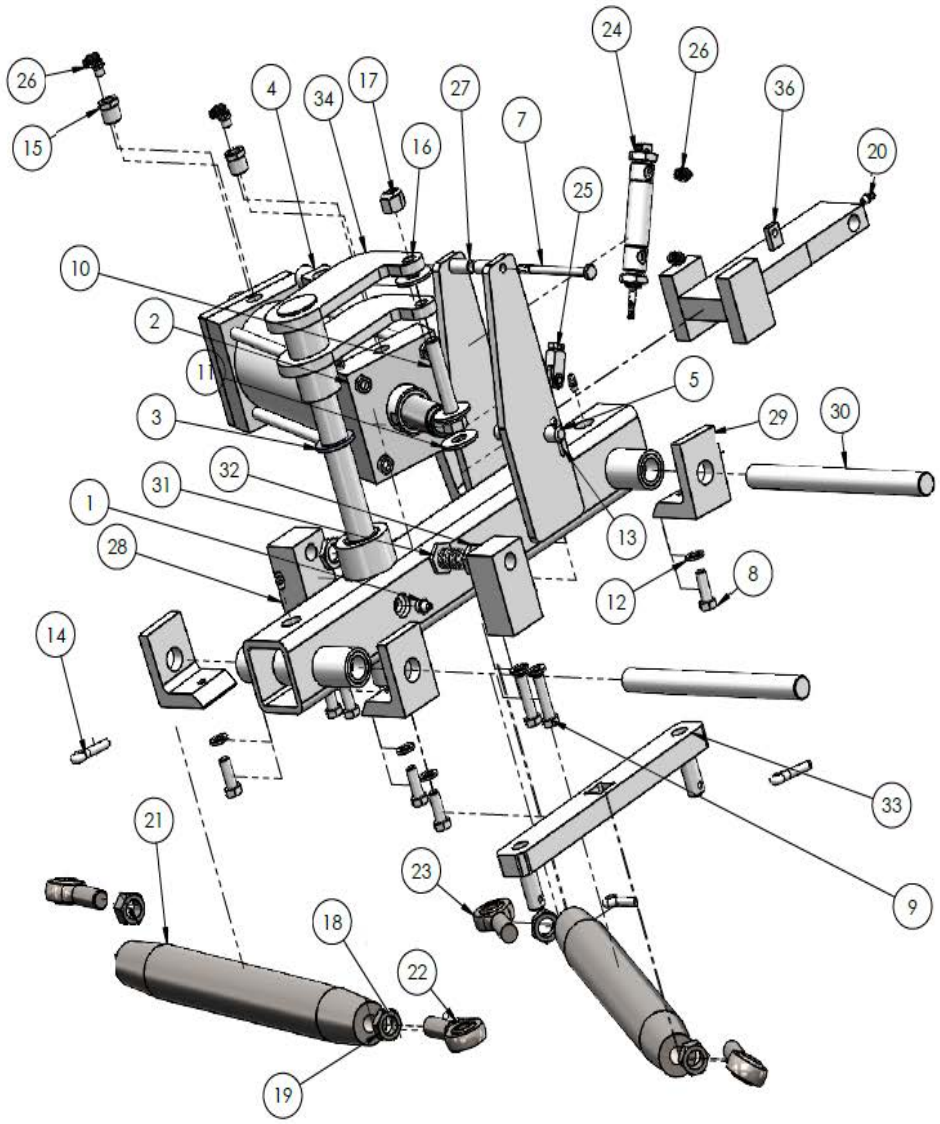

ITEM NO.	PART NUMBER	DESCRIPTION	QTY.
1	798	GREASE FITTING	1
2	4242-2	SPRING BUSHING	1
3	4675-1	AXLE WASHER	1
4	4988-13	END - CYLINDER	1
5	5775-6	PIN	1
6	5804	3.25 CYLINDER x 8IN STROKE	1
7	6036-4.00	HHCS, 1/4-20 X 4.00 GR.5	1
8	6038-1.00	HHCS, 3/8"-16 X 1.00 GR.5	5
9	6038-1.50	HHCS, 3/8"-16 X 1.50 GR.5	4
10	6040-2.75	HHCS, 1/2-13 X 2.75 GR.5	1
11	6112	FW 9/16 ID 1-3/8 OD	3
12	6149	LOCK WASHER 3/8"	9
13	6174-1.00	COTTER PIN 1/8" X 1"	2
14	6176-1.00	COTTER PIN 5/16" X 1"	4
15	6296-15	BUSHING, REDUCER PIPE 06-02	2
16	006402-00000	1/4-20" LOCKNUT	1
17	006406-00000	1/2-13 LOCK NUT	1
18	6469-7	5/8"-18 HEX NUT	2
19	6469-7-LH	NUT, HEX, 5/8"-18	2
20	6483-8	FITTING, LUB 1/4-28 TAPER STRAIGHT	3
21	7341-1	CONNECTING ROD	2
22	7342	BALL JOINT ROD END	2
23	7343	ROD, EYE LH	2
24	8761-1	CYLINDER - AIR	1
25	8764-1	CLEVIS ROD	1
26	10829-5	FITTING, MALE ELBOW 5/32 TUBE TO 1/8" MALE NPT	4
27	12597	SPACER	2
28	12619	CRAB STOP	2
29	12620	MOUNTING BAR	4
30	12622	SLIDE PIN	2
31	13482	HHCS 5/8"-11 X 1.75	2
32	13482-1	JAM NUT 5/8"-11 MACHINED	2
33	A11964-1	STEERING LEVER WELDMENT	1
34	A11968-2	STEERING SHAFT	1
35	A12596	STEERING TUBE ASSEMBLY	1
36	A12626	STEERING STOP WELDMENT	1

#

RAWMATERIAL | MATERIAL | STOCKSIZE

MINNICH MFG. CO., INC.

THE INFORMATION SHOWN ON THIS DRAWING IS CONFIDENTIAL TO MINNICH MFG. & OUR CUSTOMERS & SHALL NOT BE DISTRIBUTED TO THIRD PARTIES WITHOUT WRITTEN PERMISSION OF MINNICH MFG.

DRAWN BY: RJ

DO NOT SCALE DRAWING

CHECKED BY: AEB

APPROVED BY:

TOLERANCES (EXCEPT AS NOTED)
.X ± .060
.XX ± .030
.XXX ± .005
X/X ± 1/16"
< ± 1°

Dimension in accordance with ANSI Y14

TITLE: CRAB AND STEERING GROUP

ORIG DATE: 08/07/2018

FIXTURE NO. | LOCATION | ROUTING NO. | DRAWING NUMBER: A10050-3 | REV. LEVEL -

WHEN ORDERING REPLACEMENT PARTS YOU NEED TO FURNISH THE MODEL AND SERIAL NUMBER OF THE DRILL TOOL

ITEM NO.	PART NUMBER	DESCRIPTION	QTY.
1	009350-00001	BACKHEAD	1
16	009350-00016	BLOW TUBE GLAND	1
17	009350-00017	TUBE GLAND GASKET	1
18	009350-00018	GLAND GASKET	1
20	009350-00020	BLOW TUBE	1
37	009350-00037	CYLINDER	1
38	009350-00038	EXHAUST DEFLECTOR	1
39	009350-00039	CYLINDER GASKET	1
43	009350-00043	BUSHING	1
44	009350-00044	CENTER WASHER	1
46	009350-00046	VALVE CHEST COVER	1
48	009350-00048	AUTOMATIC VALVE	1
49	009350-00049	VALVE CHEST	1
50	009350-00050	VALVE DOWEL PIN	1
51	009350-00051	RIFLE BAR	1
52	009350-00052	ROTATION PAWL	4
53	009350-00053	ROTATION PLUNGER	4
54	009350-00054	PAWL SPRING	4
55	009350-00055	RATCHET RING	1
56	009350-00056	RIFLE NUT	1
57	009350-00057	PISTON	1
58	009350-00058	ROTATION SLEEVE 7/8" x 3-1/4"	1
58A	009350-0058A	ROTATION SLEEVE 7/8" x 4-1/4"	1
59	009350-00059	SLEEVE BUSHING 7/8" X 3-1/4"	1
59A	009350-0059A	SLEEVE BUSHING 7/8" X 4-1/4"	1
61	009350-00061	SLEEVE NUT	1
65	009350-00065	SIDE ROD NUT	2
66	009350-00066	SIDE ROD	2
67	009350-00067	FRONTHEAD	1
68	009350-00068	STEEL RETAINER 7/8" X 3-1/4"	1
68A	009350-0068A	STEEL RETAINER 7/8" X 4-1/4"	1
70	009350-00070	FRONTHEAD BUSHING	2
72	009350-00072	STEEL RETAINER PIN	1
73	009350-00073	STEEL RETAINER SPRING	2
74	009350-00074	STEEL RETAINER BOLT	2
75	009350-00075	STEEL RETAINER NUT	2
76	009350-00076	RETAINER BOLT LOCK CLIP	2

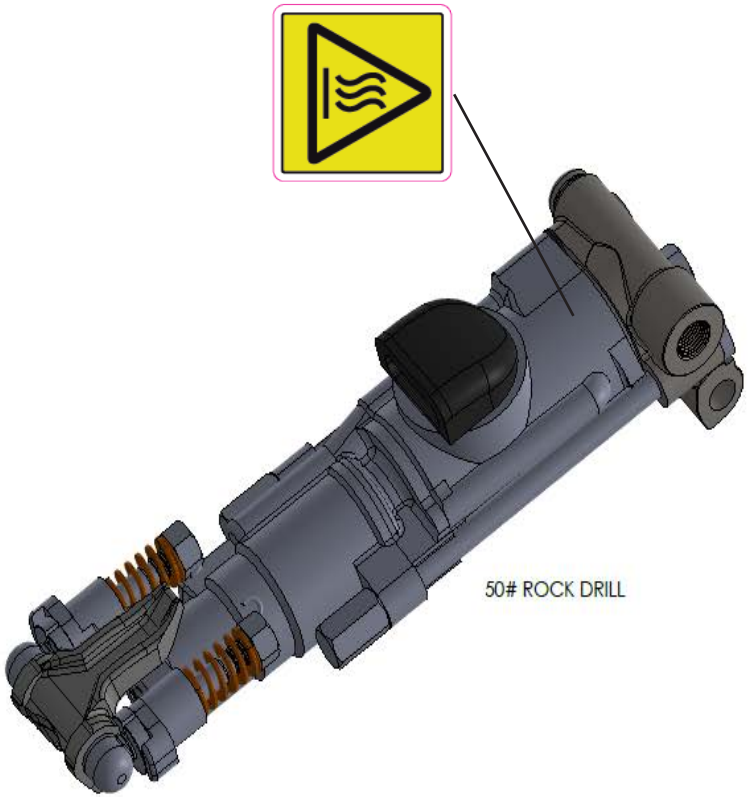

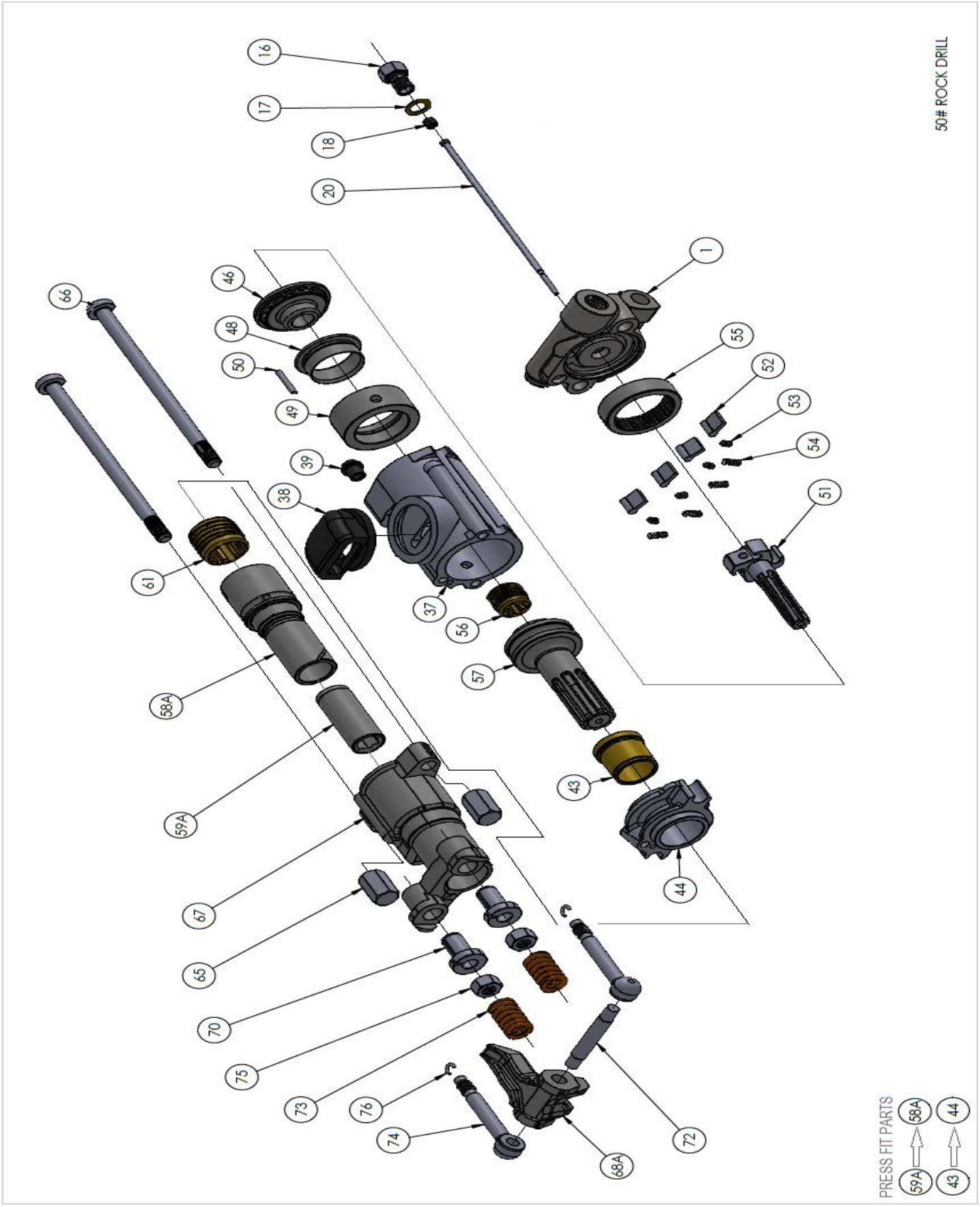
50# ROCK DRILL
PRESS FIT PARTS
58A
44
59A
43
16
17
18
20
1
55
52
53
54
51
46
48
50
49
39
38
37
56
57
43
44
66
61
58A
59A
67
65
70
75
73
76
74
68A
72

OPERATION

A regulator is used in a compressed air system to maintain nearly constant outlet pressure despite changes in the inlet air pressure and changes in downstream flow requirements. Outlet pressure is controlled by the adjusting screw (1). clockwise rotation increases and counter- clockwise rotation decreases outlet pressure setting. When the adjustment (1) is rotated fully counter- clockwise, no force is applied to the regulating spring (2), and the valve (6) is held closed by the valve spring (7). clockwise rotation of the adjustment (1) compresses the regulating spring (2) which applies a downward force on top of the diaphragm (4). The diaphragm (4) and valve pin (5) move downward forcing valve (6) off its seat (10) which allows air to flow through the regulator to the downstream system. Outlet pressure increases in the downstream system and sensing chamber (9) and applies an upward force on bottom of the diaphragm (4). The diaphragm (4), valve pin (5); and valve (6) move upward, compressing the regulator spring (2). Upward movement stops when the forces below the diaphragm balance the forces above the diaphragm. When there is no downstream flow demand, the balance of forces occurs with the valve (6) closed. When there is downstream flow demand, the balance of forces occurs when the valve opens sufficiently to compensate for demand, thus maintaining the desired outlet pressure. RELIEVING TYPE REGULATORS. With relieving regulators, outlet pressure can be reduced even though the system is deadended. When the adjustment (1) is turned counterclockwise, the force on the regulating spring (2) is reduced, and air pressure in the sensing chamber (9) moves the diaphragm (4) upward. This upward movement opens the relief passage (8) in the diaphragm and allows air to escape from the outlet side of the regulator through the relief passage (8) and vent (3) to atmosphere. As the outlet air pressure decreases to the reduced pressure setting, the diaphragm moves downward and closes the relief passage. The diaphragm will likewise move upward in a response to an increase in outlet pressure above the regulator setting, allowing air to escape to the atmosphere as described above. However, the flow capacity of the relief passage is limited, and depending upon the source of the overpressure condition, the outlet pressure might increase to a point significantly higher than the regulator setting. For this reason, the relief feature of a regulator must not be relied upon as an overpressure safety device. See WARNING note below.

⚠ WARNING

THESE REGULATORS ARE INTENDED FOR USE IN INDUSTRIAL COMPRESSED AIR SYSTEMS ONLY. DO NOT USE THESE REGULATORS WHERE PRESSURE OR TEMPERATURE CAN EXCEED RATED OPERATING CONDITIONS. SEE SPECIFICATIONS.

MAINTENANCE

The regulator can be disassembled for servicing without removal from pipe line. to disassemble, shut off the inlet air and reduce pressure in inlet and outlet lines to zero. Turn adjusting screw (1) counterclockwise until all load is removed from regulating spring (7 or 7a): Remove bonnet screws (4), bonnet (3), upper springrest (5), spring (7), and diaphragm assembly (8). The intermediate springrest (6) and compound spring (7a) are used only on 3/4" (19mm) and 1" (25.4mm) models with 5 to 125 PSI (0.34 to 8.62 Bar) adjustment range. Unscrew and remove bottom plug (16), O-ring (15) and valve spring (14). Pull valve assembly (11) together with O-ring (12) out of body. Do not remove valve seat (10) unless replacement is necessary. Remove O-ring (9) using a hook shaped tool, taking care not to damage O-ring seating surfaces or valve seat. Clean parts using warm water and soap. Dry thoroughly. Inspect each part carefully. Replace any parts which are damaged. At reassembly, apply a wipe coat of silicone base grease to O-rings (9, 12, 15), to stem and body of valve assembly (11), and to center bore in bottom plug (16). Apply a light even coat of light grease to full length of threads and tip of adjusting screw (1). Tighten valve seat (10), if previously removed, to 80-100 inch-pounds torque (9-11.3 N-m) (1/4", 3/8" and 1/2" sizes) (6.35mm, 9.53mm, and 12.77mm sizes) or 25-30 foot-pounds torque (33.9-40.7 N-m) (3/4" and 1" sizes) (19mm and 25.4mm sizes). Tighten bottom plug (16) snugly by hand. Tighten bonnet screws (4) to 20-30 inch-pounds torque (2.3-3.4 N-m) (1/4", 3/8" and 1/2" sizes) (6.35mm, 9.53mm, and 12.77mm sizes) or 50-60 inch-pounds torque (5.6-6.8 N-m) (3/4" and 1" sizes) (19mm and 25.4mm sizes).

⚠ WARNING

IF OUTLET PRESSURES IN EXCESS OF THE REGULATOR PRESSURE SETTING COULD CAUSE DOWNSTREAM EQUIPMENT TO RUPTURE OR MALFUNCTION, INSTALL A PRESSURE RELIEF DEVICE DOWNSTREAM OF THE REGULATOR. THE RELIEF PRESSURE AND FLOW CAPACITY OF THE RELIEF DEVICE MUST SATISFY SYSTEM REQUIREMENTS.

⚠ WARNING

BEFORE USING WITH FLUIDS OTHER THAN AIR, FOR NON-INDUSTRIAL APPLICATIONS, OR FOR LIFE SUPPORT SYSTEMS, CONSULT C.A. NORGREN CO

ADJUSTMENT

1. Before turning on system air pressure, turn regulator adjustment counterclockwise until all load is removed from regulating spring.
2. Turn on system air pressure.
3. Turn regulator adjustment clockwise until the desired outlet pressure is reached.
4.To avoid minor readjustment after making a change in pressure setting, always approach the desired pressure from a lower pressure. When reducing from a higher to a lower setting, first reduce to some pressure less than the desired, then bring up to the desired point.
5. Tighten jam out to lock pressure setting.

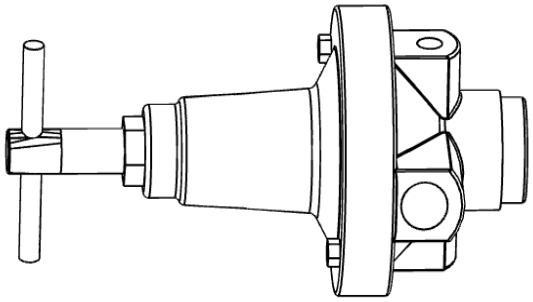

INSTILLATION

Install regulators so the airflow is in the direction of the arrow as indicated on the head of unit. Regulators should be installed downstream from filters and upstream from lubricators, but as close as possible to the pneumatic tools or appliances being serviced. The regulator will accurately control secondary pressure between 5 and 200 PSI (0.34 and 13.8 Bar), maximum primary pressure is 250 PSI (17 Bar). The self-bleed feature permits use on dead-end applications.

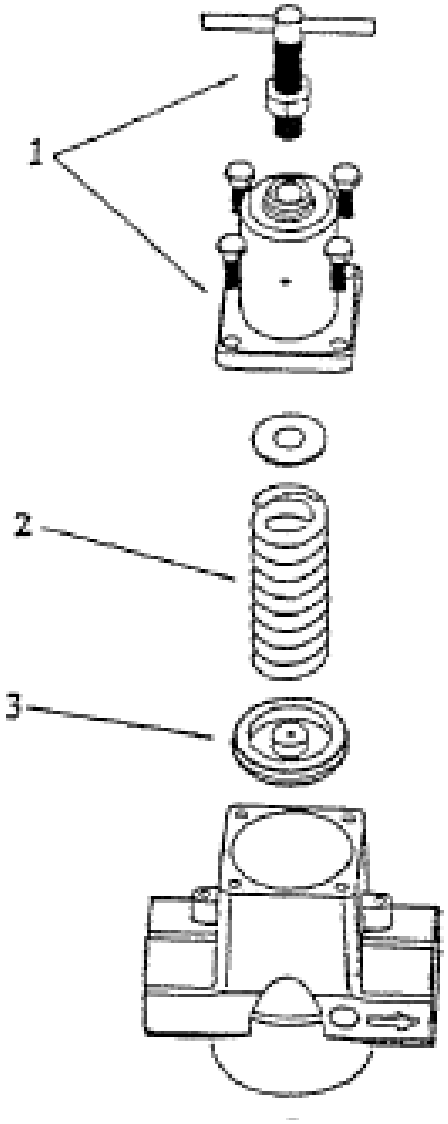

OPERATION ADJUSTMENTS

After the regulator is installed, back off pressure by adjusting T-handle counterclockwise before the air is turned on. Turn on air supply and adjust T-handle clockwise until the pressure gauge shows desired pressure. To lock the T-handle, tighten lock nut on adjustment screw.

MAINTENANCE

On detection of air leaks, pressure fluctuation, or "creep", depressurize system and remove bottom cap. Inspect valve seat for damage or wear. Inspect seat in head casting for foreign material or damage. Clean with naptha or kerosene and blow out with air. Replace any damaged parts. If leaks persist, remove spring cage, inspect piston and piston seat for wear or foreign materials. Replace any damaged Parts.

PART NUMBER	ITEM	KIT DESCRIPTION	CONTENTS
011703-00004	2, 3	Valve Kit	Valve Assembly, Valve Spring, O-Ring
011703-00003	3	Piston Kit	Relieving Piston Assembly (STD)
011703-00002	2	Spring Kit	Spring, 0-125 PSI (0-8.6 Bar) Range (STD)
011703-00001	1	Spring Cage Kit	T-Handle Adjusting Screw Assembly, Spring Cage, Screws

⚠ WARNING

FOR COMPRESSED AIR SERVICE ONLY. NOT TO BE USED ON LIFE SUPPORT SYSTEMS.

⚠ WARNING

Units are die cast aluminum. Do not over torque when installing regulator or gauge. Use of Teflon tape is not recommended.

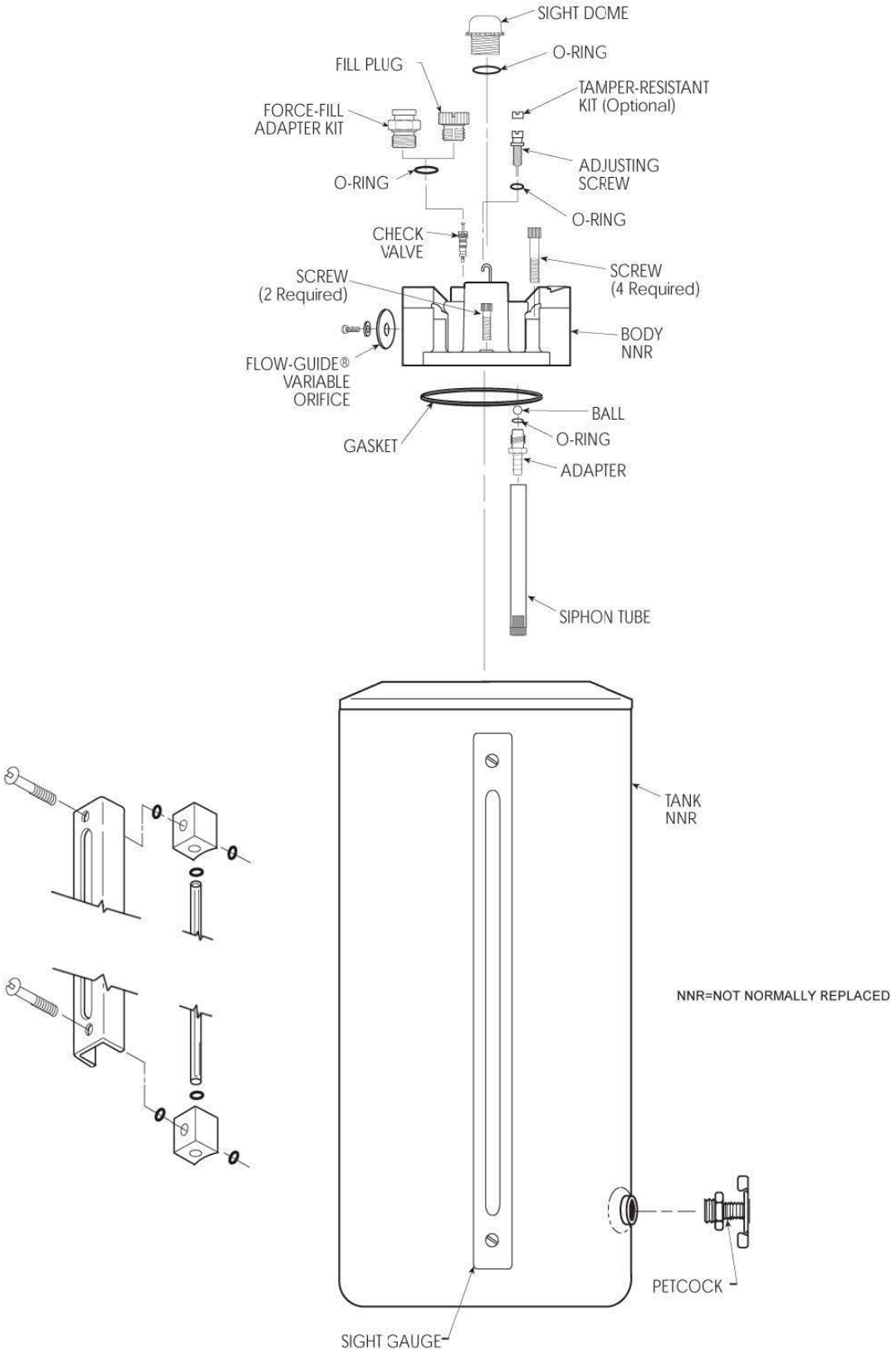
SIGHT DOME
O-RING
FILL PLUG
TAMPER-RESISTANT KIT (Optional)
FORCE-FILL ADAPTER KIT
ADJUSTING SCREW
O-RING
O-RING
CHECK VALVE
SCREW (2 Required)
SCREW (4 Required)
BODY NNR
FLOW-GUIDE® VARIABLE ORIFICE
BALL
GASKET
O-RING
ADAPTER
SIPHON TUBE
TANK NNR
NNR=NOT NORMALLY REPLACED
PETCOCK
SIGHT GAUGE

INSTILLATION

1. Refer to warning above.
2. Install as close as possible to the equipment requiring lubrication.
3. Install the unit with the air flowing through the body in the direction indicated by the arrow.
4. Install the same pipe-size unit as the pipeline in use. Avoid using fittings, couplings, etc., that restrict the airflow or baffle the oil out of the air at the lubricator outlet.
5. The lubricator may be filled under pressure by slowly removing the fill plug and pouring oil into the bowl through the fill tube. The tank may be taken off after the fill plug is removed. Do not replace the fill plug until the tank is secured in place. NOTE: As the fill plug is removed, the air pressure in the tank will be released.
6. Use only clean non-detergent oil. SAE 10 or lighter is usually best.
7. The rate of oil delivery can be controlled counterclockwise for more and clockwise for less delivery. This lubricator delivers all of the oil downstream that passes through the sight dome. The oil delivery rate will change automatically to deliver more oil during higher air flows and less oil for air flows lower than that at which the original setting was made.
8. Maximum pressure and temperature ratings for metal tanks are 200 PSI (14 Bar) and 175oF (79oC).

MAINTENANCE

1. Given clean operating conditions, this unit should be trouble-free. Contaminants from dirty oil may collect on the siphon tube inlet filter, requiring the filter to be cleaned by tapping on a hard surface and blowing off with an air blow gun. Drain off any contaminants which collect in the bottom of the bowl.
2. IF THE OIL DELIVERY RATE DROPS, shut off the air supply to the lubricator and reduce the pressure in the unit to zero. Remove the Flow-Guide® variable orifice screw and clean its air passage with a small wire. Check the bore that the screw fits into for contaminants and clean, if necessary. Be sure that the passageway from the sight dome cavity into the Flow-Guide® variable orifice post is open. Remove the adjusting screw and clean the needle and the seat in the body. Inspect and clean the passage from the needle seat down into the adapter.
3. Drain off any contaminants which collect in the bottom of the bowl.
4. Lubricate o-rings with Parker O-Lube before assembly.
5. Clean plastic bowl with a clean, dry cloth only.

⚠ WARNING

DO NOT place plastic bowl unit in service without metal bowl guard installed.

⚠ CAUTION

Certain compressor oils, chemicals, household cleaners, solvents, paints and fumes will attack plastic bowls and can cause bowl failure. Do not use near these materials. When bowl becomes dirty replace bowl or wipe only with a clean, dry cloth. Reinstall metal bowl guard or buy and install a metal bowl guard. Immediately replace any crazed, cracked, damaged or deteriorated plastic bowl with a metal bowl or a new plastic bowl and a metal bowl guard.

⚠ CAUTION

Except as otherwise specified by the manufacturer, this product is specifically designed for compressed air service, and used with any other fluid (liquid or gas) is a misapplication. For example, use with or injection of certain hazardous liquids or gases in the system (such as alcohol or liquid petroleum gas) could be harmful to the unit or result in a combustible condition or hazardous external leakage. Manufacturers warranties are void in the event of misapplication, and manufacturer assumes no responsibility for any resulting loss. Before using with fluids other than air, or for non-industrial applications, or for life support systems consult manufacturer for written approval.

NOTICE

WE CANNOT POSSIBLY LIST ALL HARMFUL SUBSTANCES. CHECK WITH A MOBAY CHEMICAL OR GENERAL ELECTRIC OFFICE FOR FURTHER INFORMATION ON POLYCARBONATE PLASTIC

DUST COLLECTOR SET-UP/INSTALLATION PROCEDURE
SET-UP/INSTALLATION

APPLICATION OF DUST COLLECTOR

1. If this dust collection system was purchased with a new drill unit, it was installed at the factory. Skip to section titled
adjustments. If this dust collection system was purchased for a separate drill unit, continue on to install.
2. Mount the main dust collector frame to your drill unit. Four different mounting configurations are typically used.

a. Minnich self propelled drill units manufactured after 2009 have mounting tabs welded to the rear of the
drill frame to accept the dust collector.

b. Minnich models A-1CL, A-1C and A-2C require a piece of angle iron with two mounting holes drilled in it
to be welded under the counterweight. Refer to drawing labeled Dust Collection System P/N A12200-1,2.

c. Minnich machine mounted models require two brackets to be bolted to the drill frame that have mounting
holes for the dust collector.

d. All other units use a universal mounting adaptor that will need to be welded to the rear of the drill unit.
Care must be taken in choosing this location so as to select one where the weight of the dust collector will not cause damage to the machine.

3. Refer to the appropriate plumbing diagram, either manifold group or control group, for connecting the pneumatic
control lines and main dust collector supply line.
4. Remove the existing drill rod support guides and install new dust collector guides in their place.
5. Route suction hoses from guides to collector. Be sure to avoid any unnecessary bends or sharp turns in the hose.
Also, make sure that the hoses will not be caught or kinked when raising or lowering the drill bed.

ADJUSTMENTS

1. With the drill bed in the lowered drilling position, slide the drill rod guides forward on the rail tube so that the rubber
section of the dust collector boot just makes contact with the face of the slab. The rubber can be trimmed as
necessary if the guide cannot be slid into the proper location. It may also be necessary to trim the boots in order to
accommodate keys or keyways on the face of the slab.
2. Make sure that the proper drill guide bushing has been selected for the guide based on the hole diameter to be drilled.
Refer to your drill manual.

DUST COLLECTOR OPERATION PROCEDURE

1.On most installations, the operation on the dust collector is automatic. When the drill turns on, the appropriate dust collection canister will automatically turn on and run a timed reverse pulse cycle and turn back off when the drill turns off. There is, however, a manual override switch that will run the reverse pulse whenever the switch is activated. This aids in the cleaning of the filters and should be done whenever the filters are suspected of becoming clogged.

2. The dust collection bucks should be checked frequently to make sure that they are emptied promptly when they become full. If the buckets become over filled, the dust will begin to accumulate around the filter cartridges, which will cause damage to the collector. NOTE: The time it takes to fill the buckets and the amount of dust collected is dependent upon the diameter and depth of the hole being drilled.

3. To empty buckets:
   a. Make sure the dust collector is turned off.
   b. Remove the lock pins from the pail retainer.
   c. Unlatch the catches to lower the bucket and slide the bucket out from under the dust collector.
   d. Dispose the dust according to federal, state,and local environmental regulations and replace the bucket.

⚠ WARNING

This procedure will result in employee exposure to collected contaminant.

DUST COLLECTOR MAINTENANCE

1. Make sure that the air supply is removed and trapped air is exhausted before performing any service or maintenance.
2. Check rod guide boot clearance to face of slab and adjust to keep boots tight, replace as necessary.
3. Examine all suction hoses for wear or leaks. Also, make sure dust particles do not clog hoses, especially at bends or the base of inclines.
4. Periodically check filters to see that they are not clogged or the filter media has not become torn.
5. To ensure optimum collector performance, always use Minnich replacement parts.

⚠ WARNING

- Improper operation of a dust control system may contribute to conditions in the work area or facility that could result in severe personal injury and product or property damage.
- Special care must be exercised in the operation and use of all dust collection equipment where combustible and/or explosive materials are present. These materials may present a fire and/or explosive hazard.
- Minnich equipment does NOT contain fire or explosive prevention equipment.A prudent user of dust control equipment will consult with an expert in explosion and fire control equipment, familiar with their hazard and local codes for recommendations on fire/explosion control equipment.
- Under no circumstances should anyone, including the operator, allow any burning objects or lit cigarettes to enter the hood or ducting of any dust control system

SERVICE

- DO NOT run the dust collector while you make adjustments and repairs unless the procedure is approved.
- Escaping fluid and air under pressure can have sufficient force to penetrate the skin causing serious personal injury. If injured by escaping fluid or air, see a doctor at once. Serious infection or reaction can develop if proper medical treatment is not administered immediately.
- Before disconnecting lines, be sure to relieve all pressure. Before applying pressure to the system, be sure all connections are tight and that lines, tubes and hoses are not damaged.
- DO NOT use your hand to search for leaks. Use a piece of cardboard or wood to search for suspected leaks.
- Tool service must be performed only by qualified repair personnel.
- Service or maintenance performed by unqualified personnel could result in a risk of injury.
- When servicing a tool, use only identical replacement parts. Use of unauthorized parts or failure to follow maintenance instructions may create a risk of injury.
- Care should be taken when manually or hand cleaning the filter pack to prevent the tearing or puncturing of the filter media.
- If collected material sticks to the filter packs, it may require manual and hand cleaning.
- Manual or hand cleaning of the filter pack or collector buckets will result in employee exposure to collected contaminant.
- Proper employee procedures should be exercised during this and other maintenance of the collector.
- For environmental compliance, it is highly recommended to consult federal, state, and local environmental protection agencies to determine proper disposal of filters and collected materials.

REVISIONS				
REV.	DESCRIPTION	DATE	APPROVED	ECR#

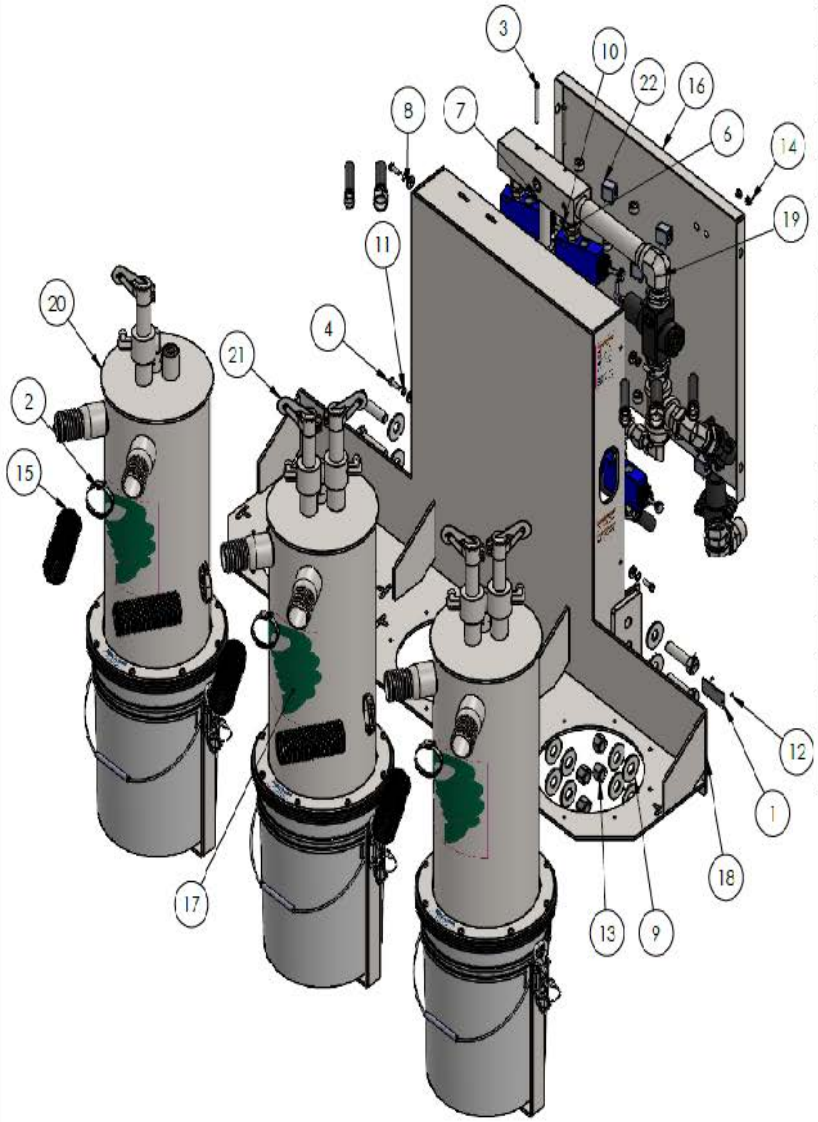

ITEM NO.	PART NUMBER	DESCRIPTION	QTY.
1	000708-00004	MODEL & SERIAL # NAME PLATE	1
2	001219-00000	1-9/16" TO 2-1/2" WORM DRIVE HOSE CLAMP	10
3	006036-3.000	1/4"-20 X 3.00" GRADE 5 H.H.C.S.	2
4	006037-1.000	5/16"-18 X 1.00" GRADE 5 H.H.C.S.	4
5	006043-3.000	3/4"-10 X 3.00" GRADE 5 H.H.C.S.	4
6	006070-00000	1/4"-20 HEX NUT	2
7	006104-00000	FLAT WASHER, 1/4 USS	2
8	006106-00000	FLAT WASHER, 5/16 USS	4
9	006118-00000	FLAT WASHER, 3/4 USS	12
10	006147-00000	1/4" LOCKWASHER	2
11	006148-00000	LOCKWASHER, 5/16	4
12	006262-00001	SCREW, DRIVE HD RD. #4 X 1/4"	2
13	006409-00000	3/4"-10 LOCKNUT	4
14	008972-00000	WHITE PLASTIC PLUG	2
15	010591-00000	2.00" PVC TUBE FLEX HOSE X 1,200.00"	1,200"
16	012182-00000	DUST COLLECTOR COVER PANEL	1
17	A12284-00002	DECAL KIT FOR: DUST COLLECTION SYSTEM 5 GANG UNITS	1
18	A12615-00000	WELDMENT, 3 CANNISTER DUST COLLECTOR FRAME	1
19	A12853-5000W	ASSEMBLY, 5 GANG WIRELESS MANIFOLD GROUP	1
20	A12854-00000	ASSEMBLY, SINGLE GANG CANISTER	1
21	A12854-00001	ASSEMBLY, TWO GANG CANISTER	2
22	A12858-5000W	ASSEMBLY, 5 GANG WIRELESS DUST COLLECTOR ELECTRICAL CONTROL GROUP	1

These size and tolerances are for holes drilled with drilling machines such as mills or lathes, drill presses, or waterjet operations. The following are standard tolerances for general machine work and apply in all cases except where greater or lesser accuracy is required by design and noted.

Drilled Hole Size	Tolerance
.0135 THRU .125	+.004/-.001
.1260 THRU .250	+.005/-.001
.2510 THRU .500	+.006/-.001
.5010 THRU .750	+.008/-.001
.7510 THRU 1.00	+.010/-.001
1.001 THRU 2.00	+.012/-.001

TOLERANCES (EXCEPT AS NOTED)
.X ± .060
.XX ± .030
.XXX ± .005
X/X ± 1/16"
< ± 1°

Dimension in accordance with ANSI Y14

FIXTURE NO. | LOCATION

RAWMATERIAL | MATERIAL | STOCKSIZE

MINNICH MFG. CO., INC.

THE INFORMATION SHOWN ON THIS DRAWING IS CONFIDENTIAL TO MINNICH MFG. & OUR CUSTOMERS & SHALL NOT BE DISTRIBUTED TO THIRD PARTIES WITHOUT WRITTEN PERMISSION OF MINNICH MFG.

DO NOT SCALE DRAWING

TITLE: ASSEMBLY, DUST COLLECTION FOR A-5SC ADI WIRELESS

ROUTING NO. | DRAWING NUMBER: A12200-500WD

DRAWN BY: RJ
CHECKED BY: AEB
APPROVED BY:
ORIG. DATE: 03/24/2022
REV. LEVEL -

DUST COLLECTOR DECAL LOCATION

A

CONTACT MINNICH

419-903-0010

WWW.MINNICH-MFG.COM

B

C

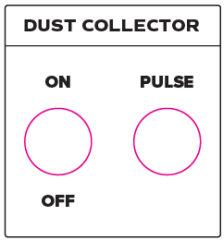

D

E

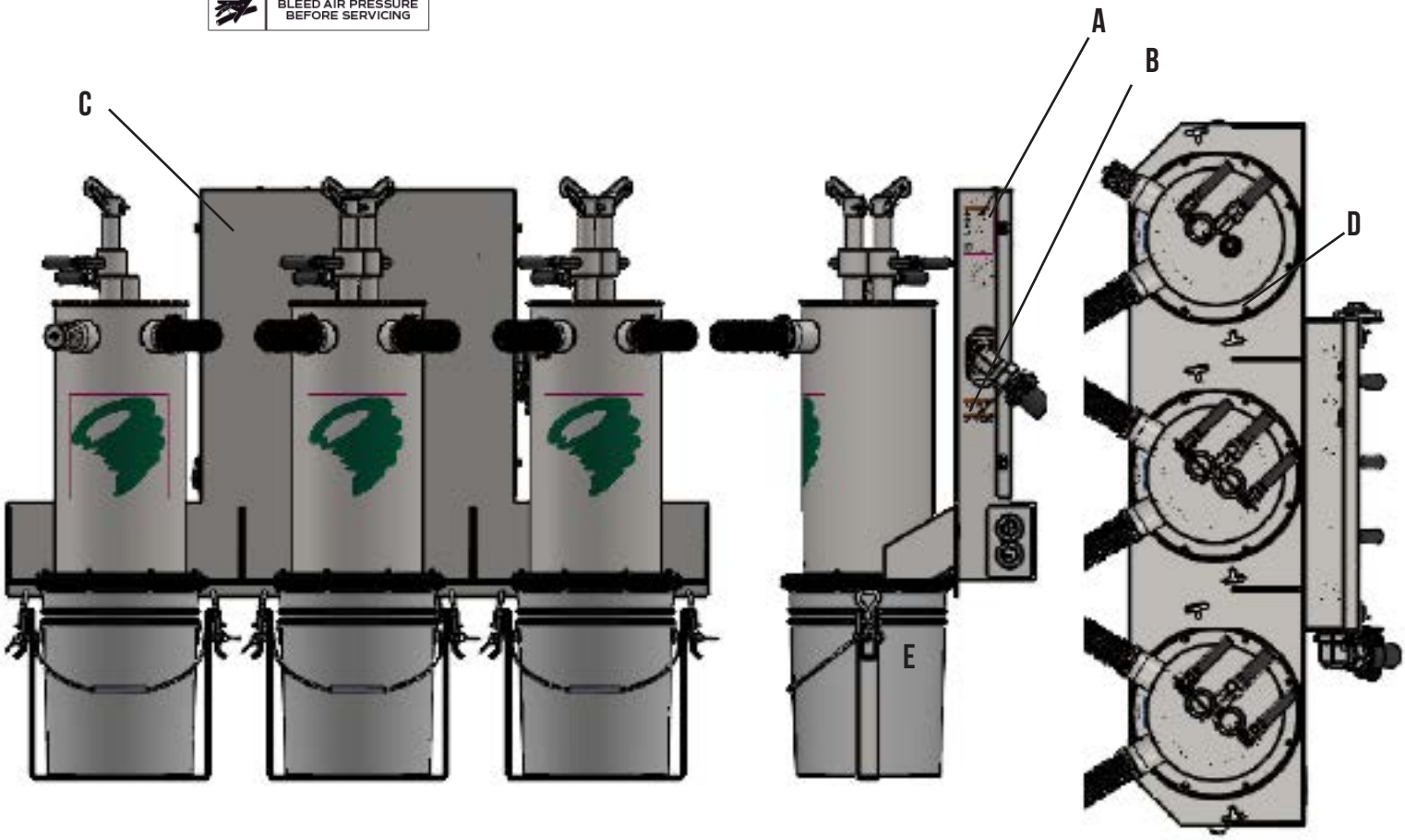

MINNICH

Supplier warrants to Customer that the Services shall be provided in a workmanlike manner and that the Goods shall be free from defects in material and workmanship at the date of shipment from Supplier's facility. This warranty shall not run to any person other than Customer.
All claims under this warranty must be made in writing and delivered to Supplier prior to the expiration of one (1) year after the Goods have been delivered (or, if applicable, within one (1) year after the Services have been performed) or be forever barred. Supplier will repair or replace Goods or parts recognized and acknowledged by Supplier as being defective at the time of delivery without charge. However, Supplier will bill Customer for Goods and/or Services not covered by the warranty, including travel expenses incurred while performing warranty service calls. EQUIPMENT, COMPONENTS OR OTHER GOODS FURNISHED THAT ARE NOT MANUFACTURED BY SUPPLIER ARE ONLY COVERED TO THE EXTENT OF THE ORIGINAL MANUFACTURER'S WARRANTY, WHICH MAY VARY FROM THE ABOVE. Further, the above warranty shall not apply to any hardware or software that has been repaired or altered without Supplier's written permission by anyone other than Supplier's personnel. The foregoing states the sole and exclusive remedy for any breach of warranty or for any other claim based on any defect in, or nonperformance of, the Goods or Services, whether based upon contract, warranty, negligence, tort (including strict liability) or otherwise.
NO EXPRESS WARRANTIES AND NO IMPLIED WARRANTIES, WHETHER OF MERCHANTABILITY OR FITNESS FOR ANY PARTICULAR PURPOSE OR WEAR CAPACITY, OR OTHERWISE, SHALL APPLY TO THE GOODS AND SERVICES. SUPPLIER SPECIFICALLY DISCLAIMS AND EXCLUDES ALL OTHER EXPRESS AND IMPLIED WARRANTIES. NO WAIVER, ALTERATION, ADDITION OR MODIFICATION OF THE FOREGOING SHALL BE VALID UNLESS MADE IN WRITING AND SIGNED BY AN EXECUTIVE OFFICER OF SUPPLIER. IN NO EVENT WILL SUPPLIER BE LIABLE FOR ANY INCIDENTAL OR CONSEQUENTIAL DAMAGES.

WHAT IS NOT COVERED

This Limited Warranty does not cover any damage, deterioration or malfunction resulting from normal wear or tear, or any alteration, modification, improper or unreasonable use or maintenance, misuse, abuse, accident, neglect, exposure to excess moisture, fire, improper packing and shipping (such claims must be presented to the carrier), lightning, power surges, or other acts of nature. This Limited Warranty does not cover any damage, deterioration or malfunction resulting from the installation or removal of this product from any installation, any unauthorized tampering with this product, any repairs attempted by anyone unauthorized by Minnich to make such repairs, or any other cause which does not relate directly to a defect in materials and/or workmanship of this product.

WHAT IS COVERED

This limited warranty ("Limited Warranty") covers manufacturing defects in materials and workmanship of a product.

WHO IS COVERED:

Only the original purchaser of this product is covered under this Limited Warranty. This Limited Warranty is not transferable to subsequent purchasers or owners of this product. The product must have been purchased directly from Minnich or from an authorized Minnich reseller.

ORDER VIA INTERNET!

Order Online:
https://www.minnich-mfg.com/login

- View parts
- Order Parts
- Print specific information
- If you don't have a login give us a call.

ORDER VIA PHONE!

Contact us at:
419-903-0010

SCAN FOR HELPFUL VIDEOS!

WE ACCEPT THE FOLLOWING CARDS!

VISA mastercard DISCOVER AMERICAN EXPRESS

NON-DEALER AND INTERNATIONAL COSTUMERS:

Contact Minnich Manufacturing through the following number to locate a dealer near you.
(419-903-0010)

NOTICE

All orders are treated as Standard Orders and will ship the same day if received prior to 3PM EST